U.S. DEPARTMENT OF COMMERCE
National Technical Information Service

PB-274 526

Study of Exhaust Emissions from 1972, 1974, and 1975 Model Year Light-Duty Vehicles in Washington, D.C

General Environments Corp, Springfield, Va

Prepared for

Environmental Protection Agency, Ann Arbor, Mich Office of Mobile Source Air Pollution Control

Apr 76

EPA-460/3-76-002

April 1976

PB 274 526

STUDY OF EXHAUST EMISSIONS FROM 1972, 1974, AND 1975 MODEL YEAR LIGHT-DUTY VEHICLES IN WASHINGTON, D.C.

U.S. ENVIRONMENTAL PROTECTION AGENCY
Office of Air and Waste Management
Office of Mobile Source Air Pollution Control
Emission Control Technology Division
Ann Arbor, Michigan 48105

REPRODUCED BY
NATIONAL TECHNICAL
INFORMATION SERVICE
U.S. DEPARTMENT OF COMMERCE
SPRINGFIELD, VA. 22161

EPA-460/3-76-002

STUDY OF EXHAUST EMISSIONS FROM 1972, 1974, AND 1975 MODEL YEAR LIGHT-DUTY VEHICLES IN WASHINGTON, D. C.

by

Aaron R. Martin, Robert D. Specht, and Leslie Anstey

General Environments Corp.
6840 Industrial Road
Springfield, Virginia 22151

Contract No. 68-03-2185

EPA Project Officer: Thomas C. Bejma

Prepared for

U.S. ENVIRONMENTAL PROTECTION AGENCY
Office of Air and Waste Management
Office of Mobile Source Air Pollution Control
Emission Control Technology Division
Ann Arbor, Michigan 48105

April 1976

This report is issued by the Environmental Protection Agency to report technical data of interest to a limited number of readers. Copies are available free of charge to Federal employees, current contractors and grantees, and nonprofit organizations - as supplies permit - from the Air Pollution Technical Information Center, Environmental Protection Agency, Research Triangle Park, North Carolina 27711; or, for a fee, from the National Technical Information Service, 5285 Port Royal Road, Springfield, Virginia 22161.

This report was furnished to the Environmental Protection Agency by General Environments Corporation, Springfield, Virginia 22151, in fulfillment of Contract No. 68-03-2185. The contents of this report are reproduced herein as received from General Environments Corporation. The opinions, findings, and conclusions expressed are those of the author and not necessarily those of the Environmental Protection Agency. Mention of company or product names is not to be considered as an endorsement by the Environmental Protection Agency.

Publication No. EPA-460/3-76-002

ABSTRACT

General Environments Corporation under contract to the Environmental Protection Agency, conducted a comprehensive study of automotive exhaust emissions on 100, light-duty vehicles in the metropolitan area of Washington, D. C. This study of 1972, 1974, and 1975 model-year consumer-owned vehicles was part of a total surveillance program conducted in seven major cities (Denver, Washington, D. C., Los Angeles, Houston, Phoenix, Chicago and St. Louis) in order to determine the impact of automotive emissions on air quality.

Specifically, vehicles in Washington, D. C. were tested for exhaust emissions using the 1975 Federal Test Procedure (FTP). During this basic test additional analyses were made on 1975 model-year vehicles to determine light hydrocarbons and aldehydes, modal emissions, and highway fuel economy. 1975 model-year vehicles also received the Clayton Key Mode Test. 1972 and 1975 model-year vehicles were also tested for exhaust emissions over two additional driving cycles in a manner similar to the FTP. One of these cycles had an average speed below that of the FTP while the other had an average speed higher than the FTP.

TECHNICAL REPORT DATA
(Please read Instructions on the reverse before completing)

1. REPORT NO. EPA-460/3-76-002	2.	3. RECIPIENT'S ACCESSION NO. PB274526
4. TITLE AND SUBTITLE A Study of Emissions from 1972, 1974, and 1975 Light-Duty Vehicles in Washington, D. C.		5. REPORT DATE
		6. PERFORMING ORGANIZATION CODE
7. AUTHOR(S) A. R. Martin, R. D. Specht, L. M. Anstey		8. PERFORMING ORGANIZATION REPORT NO.
9. PERFORMING ORGANIZATION NAME AND ADDRESS General Environments Corporation, 6840 Industrial Road, Springfield, Virginia 22151		10. PROGRAM ELEMENT NO.
		11. CONTRACT/GRANT NO. 68-03-2185
12. SPONSORING AGENCY NAME AND ADDRESS Environmental Protection Agency, Office of Air and Waste Management Programs, Mobile Source Pollution Control, Ann Arbor, Michigan 48105		13. TYPE OF REPORT AND PERIOD COVERED Final
		14. SPONSORING AGENCY CODE 200/05
15. SUPPLEMENTARY NOTES		

16. ABSTRACT

General Environments Corporation (GEC) of Springfield, Virginia was selected to participate in the FY 74 Emission Factors Program by the Environmental Protection Agency (EPA). One hundred privately owned light-duty vehicles from the Metropolitan Washington, D. C. area were tested for exhaust emission levels of total hydrocarbons, carbon monoxide, carbon dioxide, oxides of nitrogen, light hydrocarbons, and aliphatic aldehydes according to the 1975 Federal Test Procedure. 1975 model year vehicles were tested for highway fuel economy and modal emissions. The test results were used to compute emission factors based on the 1975 Federal Test Procedure.

17. KEY WORDS AND DOCUMENT ANALYSIS

a. DESCRIPTORS	b. IDENTIFIERS/OPEN ENDED TERMS	c. COSATI Field/Group
Air Pollution, Exhaust Emissions, Automobiles, Light Duty Trucks, Hydrocarbons, Carbon Monoxide, Oxides of Nitrogen, Gasoline, Fuel Economy		13B

18. DISTRIBUTION STATEMENT UNLIMITED	19. SECURITY CLASS *(This Report)* UNCLASSIFIED	21. NO. OF PAGES 182
	20. SECURITY CLASS *(This page)* UNCLASSIFIED	22. PRICE PC A09 MF A01

EPA Form 2220-1 (9-73)

TABLE OF CONTENTS

		Page
1.	Introduction	1
2.	Technical Discussion	3
2.1	Program Objectives	3
2.2	Program Design	3
2.3	Test Vehicle Procurement	4
2.3.1	Test Vehicle Selection	6
2.3.2	Test Incentives	12
2.3.3	Test Vehicle Handling	12
2.4	Facilities and Equipment	17
2.4.1	Test Location	17
2.4.2	Constant Volume Sampler	17
2.4.3	Emission Analysis Console	17
2.4.4	Laboratory Standard Calibration Gases	18
2.4.5	Chassis Dynamometer	18
2.4.6	Equipment for Aldehyde and Light Hydrocarbon Measurements	20
2.4.7	Miscellaneous Equipment	20
2.5	Equipment Qualification, Calibration and Cross-Check	22
2.5.1	Constant Volume Sampler	22
2.5.2	Emission Analysis Console	23
2.5.3	Chassis Dynamometer	25
2.6	Test Procedures	27
2.6.1	Vehicle Preparation	27
2.6.2	Equipment Preparation	28
2.6.3	Federal Exhaust Emission Test Procedure	28
2.6.4	Highway Fuel Economy Test Procedure	30
2.6.5	Modal Exhaust Emission Test Procedure	30
2.6.6	Clayton Key Mode Emission Test Procedure	31
2.6.7	Low Speed Cycle Emission Test Procedure	34
2.6.8	High Speed Cycle Emission Test Procedure	35
2.6.9	Aldehydes and Light Hydrocarbon Measurements	36
2.6.10	Daily Test Schedule	37
2.7	Data Handling	39
2.7.1	Data Collection	39
2.7.2	Data Processing	39
2.7.3	Calculation of Results	42

TABLE OF CONTENTS (CONT'D)

		Page
2.7.3.1	Exhaust Emissions (Federal Test Procedure)	42
2.7.3.2	Highway Fuel Economy	48
2.7.3.3	Modal Emissions	49
2.7.3.4	Clayton Key Mode Emissions	50
2.7.3.5	Low Speed Cycle Emissions	51
2.7.3.6	High Speed Cycle Emissions	51
2.7.3.7	Aldehyde and Light Hydrocarbon Emissions	51
3.	Discussion of Test Results	54
3.1	Federal Test Procedure Emissions and Fuel Economy	54
3.2	Highway Fuel Economy	55
3.3	Modal Emissions and Fuel Economy	55
3.4	Clayton Key Mode Emissions	55
3.5	Low Speed Cycle Emissions and Fuel Economy	55
3.6	High Speed Cycle Emissions and Fuel Economy	56
3.7	Aldehyde and Light Hydrocarbon Emissions	56
4.	Acknowledgments	57

5. Tables

Table 1: Summary of Vehicle Makes
Table 2: Summary of Test Vehicle Characteristics by Model Year
Table 3: Exhaust Emission Test Results Vs. Model Year
Table 4: Exhaust Emission Test Results for 1975 Light Duty Trucks
Table 5: Vehicles Meeting Federal Standards
Table 6: 1975 Light-Duty Trucks Meeting Federal Standards
Table 7: 1972 Vehicles Meeting 1972 Federal Standards
Table 8: 1974 Vehicles Meeting 1974 Federal Standards
Table 9: 1975 Vehicles Meeting 1975 Federal Standards
Table 10: Summary of Modal Emissions Results on Forty-Five 1975 Model-Year Vehicles
Table 11: Summary of Clayton Key Mode and Replicate Emission Results by Vehicle Makes
Table 12: Summary Results of Low Speed Driving Cycle
Table 13: Summary Results of High Speed Driving Cycle
Table 14: Summary of Light Hydrocarbon and Aliphatic Aldehyde Emissions

6. Appendices

Appendix A: Listing of Vehicle Test Parameters
Appendix B: Listing of Vehicle Use and Maintenance Data
Appendix C: Listing of Federal Test Procedure Results on Individual Vehicles
Appendix D: Listing of Highway Fuel Economy and Emission Results on Individual Vehicles

TABLE OF CONTENTS (CONT'D)

Appendix E: Listing of Modal Results on Individual Vehicles
Appendix F: Listing of Clayton Key Mode and Replicate Emission Results on Individual Vehicles
Appendix G: Listing of Low Speed Emissions and Fuel Economy Results on Individual Vehicles
Appendix H. Listing of High Speed Cycle Emission and Fuel Economy Results on Individual Vehicles
Appendix I: Test Fuel Analysis Reports

SECTION 1

INTRODUCTION

Since the motor vehicle is still considered to be one of the major sources of air quality degradation, the need for a realistic assessment of emissions from light-duty vehicles in the hands of the motoring public has been continuously recognized by the Environmental Protection Agency (EPA). One of the responsibilities of EPA, as provided through the Clean Air Act, is to determine these emission factors and provide current data to quantify the automobile's contribution to atmospheric pollution. By conducting surveillance programs in major metropolitan areas, average emission factors for motor vehicles can be developed and supplied to the National Air Data Branch (NADB) and the Transportation Land Use Planning Branch (TLUPB) for their use in determining nationwide and metropolitan area emissions.

EPA's first major surveillance program using the present CVS technique, which is a mass measurement method of determining exhaust emissions, was in 1971. Surveillance programs were conducted prior to this; however, a volumetric measurement method, normally called the 7-mode test, was used to determine the exhaust emissions. The FY 71 program determined the emissions from 1957-1971 light-duty vehicles. Similarly, the FY 72 program investigated 1966-1972 vehicles and the FY 73 program sampled 1967-1974 light-duty vehicles, and this program sampled pre-1968 through 1975 model year light-duty vehicles.

In carrying out its continuing effort, the EPA contracted with General Environments Corporation to determine and provide emission test

data from a representative sample (100) of 1972, 1974 and 1975 model year vehicles operating in the metropolitan area of Washington, D. C. This city was one of seven areas to be investigated by EPA. The other U. S. metropolitan cities were Denver, Los Angeles, Chicago, Houston, Phoenix and St. Louis. This report describes the performance, procedures, and results of the 100 vehicles sampled in Washington, D. C.

SECTION 2

TECHNICAL DISCUSSION

2.1 PROGRAM OBJECTIVES

The primary objective of this program was to determine the exhaust emissions of a scientifically valid sample of in-use 1972, 1974 and 1975 light-duty, consumer-owned vehicles in the Washington, D. C. metropolitan area. These data, along with those developed in six other major U. S. cities, will subsequently be used to develop emission factors that will define the contribution of light-duty vehicles to the national air pollution inventory. A secondary objective was to determine vehicle fuel economy and real-time emissions on a continuous basis.

2.2 PROGRAM DESIGN

To support the overall objective of this program two major requirements existed.

First, it was important that the vehicles truly reflected a representative sample of the nationwide population and that a selection process be followed that minimized any bias that could be encountered. That is to say, at the initiation of the selection process, every registered vehicle owner in the population should have an equal chance to be selected. The sample list provided by EPA which was based on nationwide distribution and miles traveled for each model-year vehicle, stipulated the number of vehicles in each model-year and the vehicle make and size, engine type, displacement, transmission type and number of carburetor venturis.

The second major consideration was to perform the various emission tests with an established methodology of well defined procedures and qualified calibrated test equipment. This was accomplished using the constant volume sampling technique in accordance with the 1975 Federal Test Procedures (FTP). All vehicles were subjected to this test.

The data obtained allowed computation of emission rates in gms/mile of hydrocarbon, carbon monoxide, carbon dioxide and oxides of nitrogen in accordance with both the 1972 and 1975 FTP calculation procedures.

Specific light hydrocarbons (methane, ethane, propane, benzene and acetylene) and aliphatic aldehydes were measured during the basic test conducted on 1975 model year vehicles.

Fuel economy was calculated for the 1972 and 1975 FTP. In addition, EPA's Highway Fuel Economy Test (HFET) was conducted on 1975 model year vehicles and fuel consumption was determined by the carbon balance method.

1975 model-year vehicles were also subjected to EPA's Surveillance Driving Sequence (SDS) and modal emissions were measured continuously for various acceleration/deceleration/steady-state modes.

2.3 TEST VEHICLE PROCUREMENT

This program required obtaining 100 automobiles that were consumer-owned and typical in-use vehicles. The number of each make was based upon the sales volume and vehicle miles traveled for each model-year. The required number of vehicle makes for Washington, D. C. is shown in Figure 2-1. A detailed listing of specific vehicles was provided by EPA which described model-year, make, displacement, vehicle size, transmission type and number of carburetor venturis. This section describes the methodology

FIGURE 2-1 VEHICLE LISTING (BY MAKE)

MAKE	TOTAL	1975	1974	1972
Light-Duty Trucks				
Chevrolet	4	4		
Dodge	1	1		
Ford	4	4		
GMC	1	1		
Domestics				
AMC	3	1	1	1
Buick	6	3	2	1
Cadillac	2	1	-	1
Chevrolet	18	6	6	6
Chrysler	1	1	-	-
Dodge	5	2	2	1
Ford	15	5	5	5
Lincoln	1	-	1	-
Mercury	4	2	1	1
Oldsmobile	7	3	3	1
Plymouth	6	2	2	2
Pontiac	7	3	2	2
Imports				
Audi	-	-	-	-
Capri	1	1	-	-
Colt	-	-	-	-
Datsun	3	1	1	1
Fiat	-	-	-	-
Honda	1	1	-	-
Mazda	1	-	1	-
Mercedes-Benz	-	-	-	-
MG	-	-	-	-
Opel	-	-	-	-
Porsche	-	-	-	-
Toyota	3	1	1	1
VW	6	2	2	2
Volvo	-	-	-	-
TOTAL	100	45	30	25

and procurement procedures used in obtaining the necessary vehicles to fit the specific requirements.

2.3.1 Test Vehicle Selection

To select a qualified sample list several steps were required and are depicted in Figure 2-2. The first step was to obtain a randomized registration list within the site boundary. This listing was obtained from R. L. Polk & Co. The site boundary was defined as within 10 miles of the geographical boundary of the District of Columbia. The list supplied by Polk consisted of mailing labels within this boundary, an example of which appears in Figure 2-3.

A mass mailing of 2000 letters was sent throughout the program to obtain a prospective candidate list that best fit the sample population profile. This introductory mailing contained:

- o EPA Introductory Letter - Figure 2-4
- o GEC Introductory Letter - Figure 2-5
- o Response Card - Figure 2-6

Concurrently, contacts were made with civic and fraternal organizations, local college groups and rental agencies. It was important that these other sources be utilized only when absolutely necessary. Consequently, less than 10 cars were obtained from these groups, of which 2 were rental vehicles.

Once the original contact was made, a file was established and maintained by year and make. Information was obtained from car owners regarding engine size, transmission and carburetor venturis. If the vehicle fit the requirements and the owner agreed to participate a tentative schedule was established. The specific vehicle requirements established by EPA allowed some flexibility for substitutions. This listing

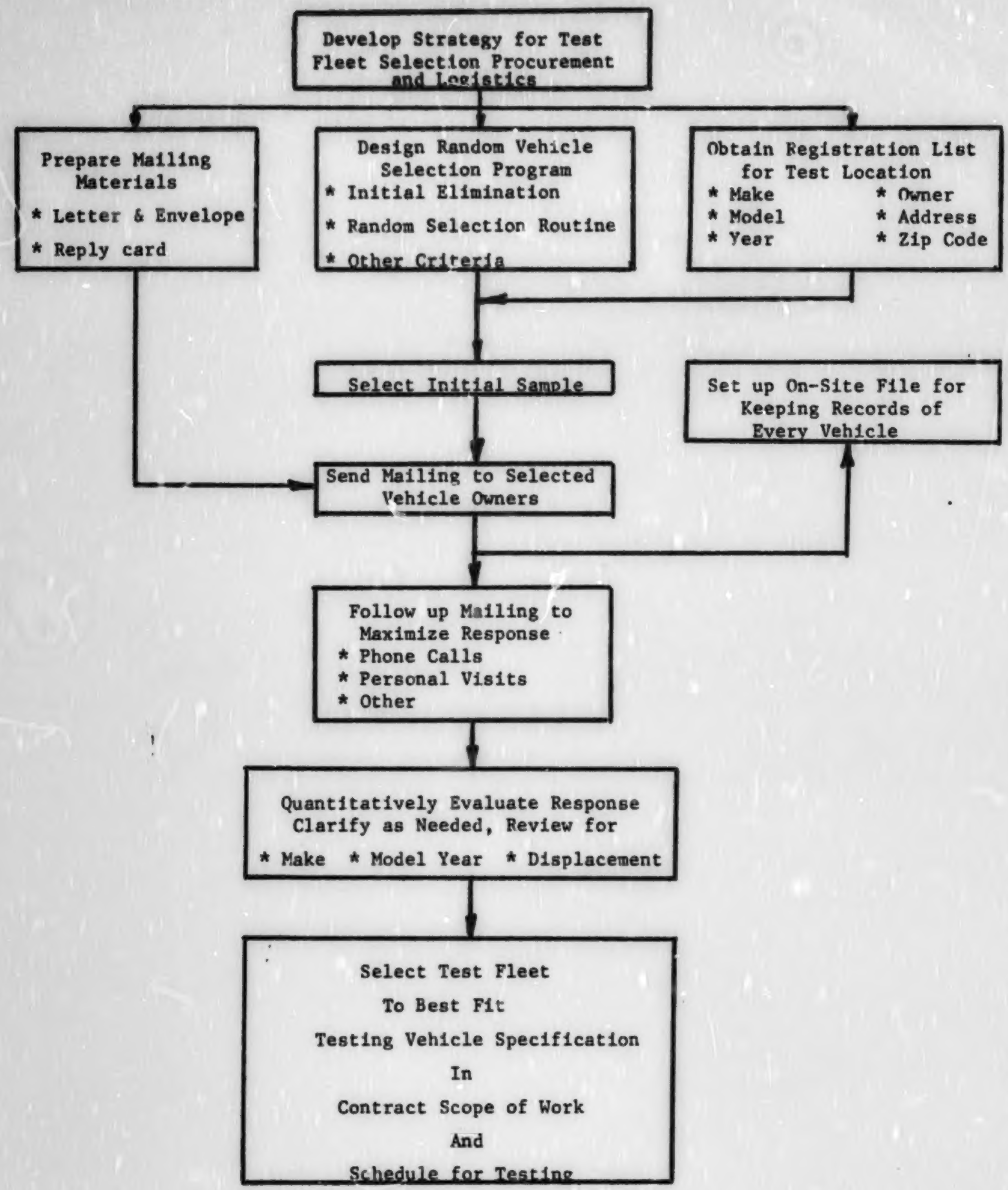

FIGURE 2-2 VEHICLE SELECTION PROCEDURE

05 I 75
MR WILFERT S FELLS
2226 BEACON HILL RD
ALEXANDRIA VA 22306

07 F 72
MR GERARD G CUNNINGHAM
2325 FREETOWN DR
HERNDON VA 22091

17 X 72
MR WILLIAM R WOOD JR
4533 KINGSTON RD
WOODBRIDGE VA 22193

09 C 72
MR ROY F GURNHAM
801 N PITT ST
ALEXANDRIA VA 22314

21 F 75
MR RONALD E BLANCHARD
7701 CARRLEIGH PKWY
SPRINGFIELD VA 22151

32 X 74
MR MELVIN C PUTZKE
5611 SEDGEWICK LN
SPRINGFIELD VA 22151

FIGURE 2-3 TEST VEHICLE MAILING LABELS

Form Approved OMB No. 158-R0106

UNITED STATES ENVIRONMENTAL PROTECTION AGENCY
WASHINGTON, D.C. 20460

A Message to the Vehicle Owner

The U. S. Environmental Protection Agency, in carrying out the Clean Air Act, has contracted with competent testing organizations to conduct emission tests on certain randomly-selected vehicles. The purpose of these tests is to develop emission factors for use in making nationwide emission estimates. The test results from any individual vehicle will be used only by the EPA in comparison with the test results from all similar vehicles. The outcome of the test on any individual vehicle cannot result in any adverse action against the vehicle owner.

The enclosed letter to you, from one of these testing organizations, explains this project in detail, and asks to test your vehicle. The purpose of this message is to urge that, if at all possible, you allow your vehicle to be tested in this program.

To assure valid results from this program, the specific vehicles that will comprise the sample to be tested are randomly selected in proportion to a nationwide population average, without bias, from vehicle registration lists provided by private research firms. Your vehicle has been tentatively selected by means of this process. Even if your vehicle is not selected to undergo the actual test, your willingness to participate will represent a real and significant contribution to the case of Clean Air.

Sincerely yours,

Eric O. Stork
Deputy Assistant Administrator
Mobile Source Air Pollution Control

Form No. AA-101-5

FIGURE 2-4

GENERAL

General Environments Corporation / 6840 Industrial Road, Springfield, Virginia 22151 / (703) 354-2000

Form No. 5050-2

Form Approved
Office of Management
& Budget No. 158-R0106

Dear Vehicle Owner:

You may be able to make an important contribution toward controlling the nation's air pollution problem, and receive a $50 U. S. Savings Bond for your cooperation.

As you may know, the U. S. Environmental Protection Agency is conducting an important testing program for vehicle exhaust pollution in six major metropolitan areas: Chicago, St. Louis, Denver, Phoenix, Houston, and Washington, D. C. Our organization has been selected by the Government to perform these tests in this area. We are writing to you because your vehicle has been randomly selected as a candidate for testing.

Enclosed is a postpaid card which we would like you to complete and return at your earliest convenience. Printed on the card is the model year and make of a vehicle registered in your name. Please indicate if you still own this vehicle, and if you are willing to submit it to our laboratory where it will be tested under simulated normal driving conditions. No unusual operations will be performed and no adjustments will be made to your vehicle. It will be fully insured while in our possession.

We have been authorized by the Environmental Protection Agency to award a $50 U. S. Savings Bond to each participant whose vehicle is tested. Also, if you wish, we will provide you, free of charge, a late-model, fully insured rental car for your use during the time your vehicle is being tested.

We know you will want to be part of this important project. Please complete and return the enclosed postpaid card today. We will contact you shortly, if your vehicle qualifies, to schedule the test.

Sincerely yours,

GENERAL ENVIRONMENTS CORPORATION

A. R. Martin

ry
Enclosure

FIGURE 2-5

No
Postage Stamp
Necessary
If Mailed in the
United States

BUSINESS REPLY MAIL
FIRST CLASS PERMIT NO. 110 SPRINGFIELD, VIRGINIA

Postage will be paid by:

GENERAL ENVIRONMENTS CORPORATION
6840 Industrial Road
Springfield, Virginia 22151

OMB Approval R158-0106

Are you willing to volunteer your vehicle for pollution testing? If so, please provide the following information, and mail this postcard today.

Name____________________/Telephone__________
Street____________________/Best Time to
City______________Zip________/ call________
Make of vehicle (Chev.,Ford,Plym.,etc.)________Year________
Engine size (displacement)__________Cubic Inches. (or Cubic Centimeters)
Carburetor: 1 barrel ; 2 barrel; 4 barrel; no barrel (fuel injection)
Transmission: Automatic ; Manual
Air Conditioning: Factory Installed? Yes ; No
Operational? Yes ; No
Vehicle Size: Full Size ; Intermediate ; Compact ; Subcompact

Company Use Only
Date of Contact____________Vol./No.____________
FORM NO. 5050-1

FIGURE 2-6 REPLY CARD

of required vs. actual is shown in Figure 2-7. If no vehicle identification is shown in the actual column then this indicates the required vehicle was obtained and tested. An example of the vehicle identification is shown below.

F 350 A 4

- 4 bbl carb.
- automatic trans.
- C.I.D.
- Full Size

2.3.2 Test Incentives

All participating owners whose vehicle successfully completed the test program requirements received

- o a fully insured loan car while their vehicle was being tested
- o a full tank of gas in their vehicle on completion of testing
- o a $50 U. S. Savings Bond

2.3.3 Test Vehicle Handling

Once a vehicle arrived at the laboratory, a preliminary inspection was conducted which consisted of an inspection to determine if there were obvious problems with the exhaust or emission control systems and that the vehicle had the proper engine, transmission, and carburetor combination. Included in this inspection was general mechanical condition of the vehicle as well as driveability and safety of operation.

1975 EMISSION FACTORS PROGRAM

TEST SITE: WASHINGTON, D. C. CONTRACTOR: GENERAL ENVIRONMENTS CORPORATION

		1975			1974			1972		
MAKE	TOTALS	VEH. NO.	PROPOSED	ACTUAL	VEH. NO.	PROPOSED	ACTUAL	VEH. NO.	PROPOSED	ACTUAL
LIGHT DUTY TRUCKS										
Chevrolet	4	6001	T350M2	T250M1						
		6002	T350A2							
		6003	T350A4	T350A2						
		6004	T350A4*	T350A2*						
Dodge	1	6005	T318A2							
Ford	4	6006	T302M2	T300M2						
		6007	T302A2							
		6008	T360A2	T351A2						
		6009	T360A2*	T351A2*						
GMC	1	6010	T350A4							
DOMESTICS										
AMC	3	5011	C258A1		4046	F304A2*	I304A2*	2076	X258A1	
Buick	6	5012	I350A2*	I231A2*	4047	F455A4*		2077	F455A4*	
		5013	F455A4*		4048	I350A2				
		5014	I350A4*	F455A4*						
Cadillac	2	5015	F500A4*					2078	F472A4*	
Chevrolet	18	5016	X140M1	X140A2	4049	X140A1	X140M1	2079	X140M2	
		5017	C250A2	C250A1	4050	I350A2*		2080	I350A2*	
		5018	I350A2*		4051	C250M1	C250A1	2081	I350A2	
		5019	F350A2		4052	C350A2*	I350A2*	2082	C307A2	
		5020	F350A2*		4053	F350A4*		2083	F350A2*	
		5021	F400A4*		4054	F400A4*	F400A2*	2084	F400A2*	
Chrysler	1	5022	F400A2*	F440A4*						
Dodge	5	5023	I318A2*	I360A2*	4055	I360A2*		2085	I318A2*	
		5024	C225A1		4056	C225A1				
Ford	15	5025	X140M2	X140A2	4057	X122M2		2086	X122M2	
		5026	I302A2*	I351A2*	4058	I302A2*		2087	I351A2*	
		5027	C250A1		4059	C250A1		2088	C200A1	
		5028	F351A2*		4060	F351A2*		2089	F351A2*	
		5029	F400A2*		4061	F400A2*		2090	F400A2*	
Lincoln	1				4062	F460A4*				
Mercury	4	5030	F400A2*	F460A4*	4063	I302A2*	I351A2*	2091	F400A2*	F429A4*
		5031	I351A2*							
Oldsmobile	7	5032	F350A4*		4064	I350A4*		2092	I350A2*	F350A2*
		5033	I350A4*		4065	F350A4*				
		5034	F455A4*		4066	F455A4*				
Plymouth	6	5035	I318A2*		4067	I318A2*		2093	C225A1	
		5036	C225M1		4068	C225M1		2094	F360A2*	
Pontiac	7	5037	F400A2*	F400A4*	4069	F400A2*	I400A2*	2095	F400A2*	
		5038	I350A2		4070	I350A2*		2096	I350A2	
		5039	F455A4*	F400A2*						
IMPORTS										
Capri	1	5040	X140M2							
Datsun	3	5041	X085A2	X085M2	4071	X110M2		2097	X097M2	
Honda	1	5042	X091M3							
Mazda	1				4072	X070M4	X070M2			
Toyota	3	5043	X133A2*	X097M2*	4073	X097M2		2098	X120M2	X097M2
VW	6	5044	X097M0	X090M2	4074	X097M1*		2099	X097M1	
		5045	X090A2*	X090M1	4075	X097M1		2100	X103M1	X097M1
	100									

FIGURE 2-7 TEST VEHICLE SUBSTITUTE LIST

GENERAL ENVIRONMENTS CORPORATION

Date ______________

TO WHOM IT MAY CONCERN:

I certify that I have this date received from General Environments Corporation (GEC) the following Vehicle for my private use while my car is being tested for exhaust emissions.

Vehicle Make ___________ Model ___________ Year ___________

License No. ___________ Odometer Reading ___________________

I further understand that my car will be "in test" for approximately 72 hours and that I will be advised when to pick up my car.

____
(Signature of car Owner)

General Environments Corporation hereby acknowledges receipt of the below described vehicle for the purpose of conducting an exhaust emissions test.

Vehicle Make ___________ Model ___________ Year ___________

License No. ___________ Odometer Reading ___________________

Remarks: ____

____
(GEC Representative)

FIGURE 2-8 LOAN CAR RECEIPT

Any replacements to be made due to aborted tests or non-compliance with the test requirements were contacted from a reserve file.

After the preliminary inspection was conducted, an exchange of vehicles and receipts (Figure 2-8) took place. The test vehicle was driven to the defueling area and the gas tank emptied. The gasoline was deposited into a 55 gallon drum. The specified volume of test fuel was pumped into the vehicle's gas tank.

A 10 minute course was set up through the local area and each vehicle was driven over this course before being placed in the laboratory. The vehicles were driven into the laboratory and parked. At this point the date and time were posted on each vehicle's windshield. The owner's drive to the laboratory and the 10 minute purge run constituted the vehicle preconditioning.

The vehicle was hand pushed within the laboratory at all times and included hand pushing onto the dynamometer to start the test.

The fuel used was Texaco Indolene 30 for vehicles not equipped with catalytic converters. Converter equipped vehicles were fueled with Texaco unleaded gasoline. Certified analyses of the test fuels are included in Appendix I of this report.

A final inspection was performed after the vehicle was situated on the dynamometer before the actual test was begun.

After the test was completed, the ignition timing, idle speed and dwell were measured and recorded. A listing of measured values versus manufacturers' specifications is contained in Appendix A. The carbon monoxide and hydrocarbons in the exhaust were measured and recorded while the engine was idling. This total procedure is shown in Figure 2-9.

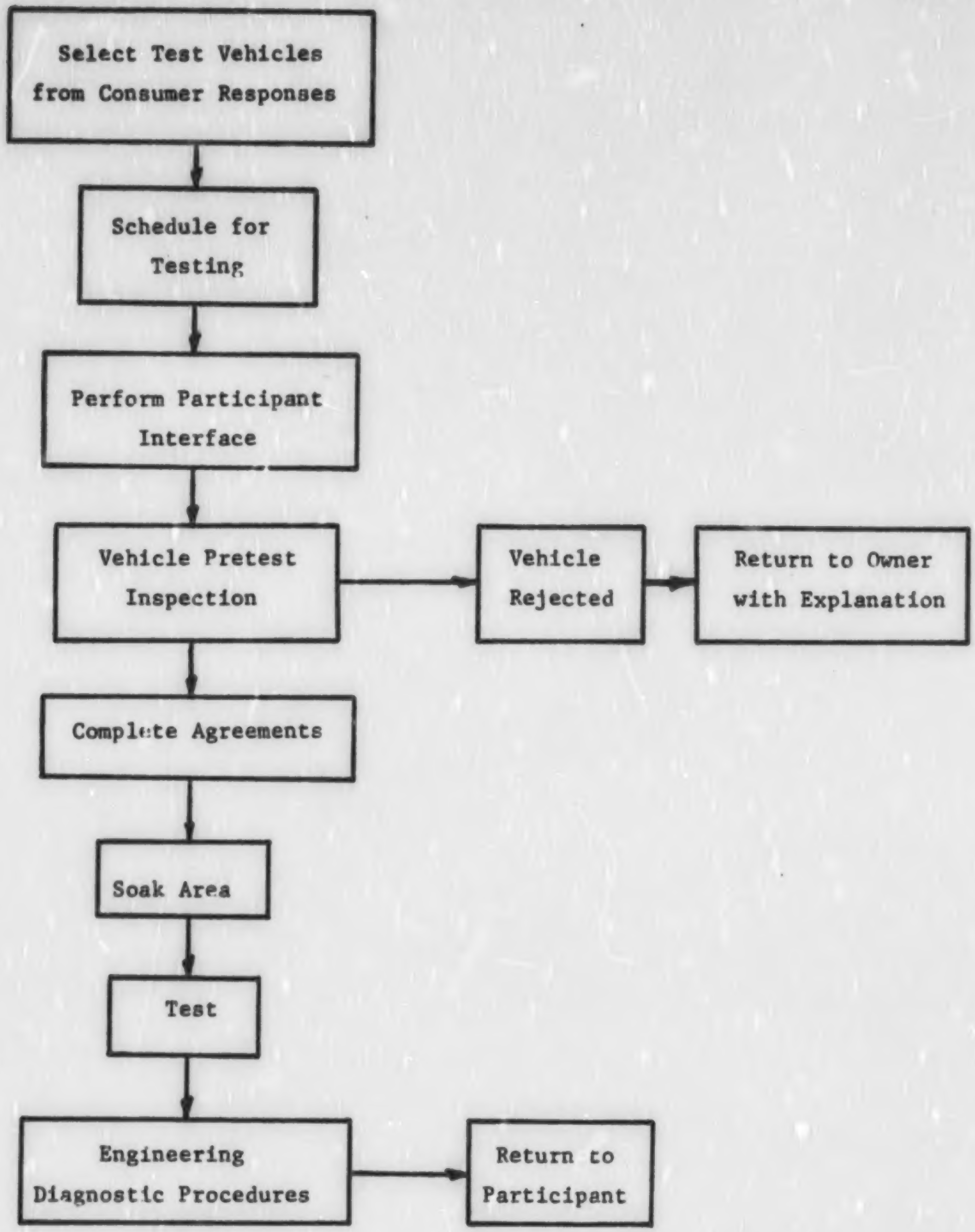

FIGURE 2-9 VEHICLE HANDLING PROCEDURES

2.4 FACILITIES AND EQUIPMENT

2.4.1 Test Location

All testing covered in this report was conducted at GEC's test facility at 6840 Industrial Road, Springfield, Virginia, located within ten miles of the metropolitan area of Washington, D. C. at an elevation of 400 feet above sea level. The facility contains 30,000 square feet of laboratory and soak space with adequate outside parking adjacent to the building. The average summer temperature is about 75 degrees Fahrenheit and winter temperatures average about 35 degrees Fahrenheit.

2.4.2 Constant Volume Sampler

The constant volume sampler utilized in the performance of this contract was the Horiba 45 G Constant Mass Flow Sampler and was equipped with a water cooled heat exchanger. The sampler was specifically designed and constructed to condition and collect exhaust gases as generated from a light-duty vehicle when operated over the Federal Test Cycle.

2.4.3 Emission Analysis Console

A Scott Emission Analysis Console, Model 119 contained analyzers for CO, CO_2, HC, and NOX. The major components used were:

- o Beckman Model 865 NDIR-CO analyzer with ranges of 0-.3/0-3.0% CO
- o Horiba Model AIA-21-AS NDIR-CO analyzer with ranges of 0-100/0-500 ppm CO
- o (2) Beckman Model 400 hydrocarbon analyzers with ranges of 0-50/0-100/0-300/0-1000/0-3000 ppm C

- Thermo Electron Model 10A chemiluminescence analyzer with ranges of 0-100/0-250/0-1000/0-2000 ppm NO
- (2) Leeds & Northrup Speedomax Model XL-600 dual-pen strip-chart recorders

2.4.4 Laboratory Standard Calibration Gases

A complete set of laboratory standard calibration gases were procured by GEC for subsequent analysis by the EPA laboratories in Ann Arbor, Michigan. The "naming" of gases by EPA was done prior to the start of testing. The number of various gases was of such a quantity as to provide a minimum of seven points per range (including zero) for the CO and CO_2 analyzers and three points per range (including zero) for the HC and NO_x analyzers. The standard gases and their nominal concentrations are shown in Figure 2-10. Upon return from EPA all gas cylinders were fitted with gold caps to ensure easy identification. Thereafter, all working span gases used in the day-to-day calibration were analyzed against these "golden standards" for concentration determination.

All zero gases were analyzed by the specialty gas supplier and certified to meet the specifications contained in the Federal Register and were checked against a standard zero gas prior to use.

2.4.5 Chassis Dynamometer

A Clayton Model ECE-50 chassis dynamometer with direct-drive variable inertia flywheel assembly was used.

The dynamometer was equipped with 250 lb. increment inertia weights and a 0-50 horsepower absorption unit. Readout instrumentation included a speedmeter and a roadload horsepower meter.

HC-FID (ppm C in air) RANGE

0-50	0-100	0-300	0-1000	0-3000
21.0	43.8	135.6	455.1	1381.8
43.8	90.3	273.3	909.6	2866.8

CO_2-NDIR (% CO_2 in N_2) RANGE

0-4	0-8
0.41	(1.46)
1.03	(2.08)
(1.46)	(2.92)
(2.08)	(3.75)
(2.92)	5.43
(3.75)	7.53

CO-NDIR

(ppm CO in N_2) RANGE		(% CO in N_2) RANGE	
0-100	0-500	0-.3	0-3
10.3	(71.1)	(352.4)	(.275)
24.8	(89.5)	(479.6) ppm	.780
35.1	174.3	1016.2	1.11
48.9	244.2	.153%	1.52
(71.1)	(352.4)	.216%	2.11
(89.5)	(479.6)	(.275%)	2.73

NOX-CLU (ppm NO in N_2) RANGE

0-100	0-250	0-1000	0-2000
48.0	117.0	504.0	(1052.0)
97.0	249.0	(1052.0)	1925

( ) means multiple range use

FIGURE 2-10 LABORATORY STANDARD CALIBRATION GASES

2.4.6 Equipment for Aldehyde and Light Hydrocarbon Measurements

The following major equipment was used in determining the specific light hydrocarbons of interest.

- Perkin-Elmer Model 900 gas chromatograph
- Infotronic Model CRS 108 digital integrator with Victor Digimatic printer
- Leeds & Northrup Speedomax "W" single channel recorder with .1-1.0 mv response

The determination of aldehydes was made with a Bausch & Lomb Spectronic 20 Spectrophotometer. Also, a special sampler was fabricated by GEC which included sample and exhaust manifolds, vacuum pump and a flow switching control system.

2.4.7 Miscellaneous Equipment

In addition to the major equipment described, various other support equipment was utilized. A data acquisition and control system using a Hewlett-Packard 2116A computer was used in conducting analysis of the steady state and transient modes of the surveillance driving cycle. Software programs were developed and used for data reduction of: 1) light hydrocarbon and aldehyde determination; 2) fuel economy calculations; 3) mass emission calculations; 4) propane recovery results; 5) highway fuel economy calculations and 6) calibration curve development.

Further support is described below.

A Mettler analytical balance, Model H315 was used to weigh propane cylinders used during propane recovery tests of the CVS. The balance accuracy was 0.1 milligram and a range of 0-1000 grams.

A Varian Associates Model G-1000 Time/Speed Recorder was employed to provide a graphic record of the simulated vehicle speed versus the prescribed driving course using a preprinted time/speed listing. Prior to implementing the test schedule the chart speed of the driver's aide was determined several times. The chart speed over the entire length of the FTP time/speed listing was determined to be within the ± 2 second tolerance allowed by the contract scope of work.

A Penske timing light Model 244 2115 was employed to determine test vehicle engine timing. A Snap-on Model MT416 primary tach dwell meter was used to measure point dwell and idle r.p.m.

Additional items of equipment included a Hartzel, Model N24-DUW, 5300 CFM cooling fan to move air through the test vehicle radiator, front wheel restraining blocks, vehicle restraining cables, tire pressure gage (0-50 psi) and miscellaneous tools.

A Meriam Laminar Flow Element (LFE) Model 50MC2-6SF with a range of 0-1000 SCFM was employed to calibrate the constant volume sampler mass airflow. The LFE was used in conjunction with a Model 310EF10 inlet absolute pressure gage and a Model 40HE35 differential pressure indicator.

A recording aneroid barometer was used to provide a local atmospheric pressure record for each day of testing. Barometric pressure readings during testing were accomplished with a mercurial barometer.

A Brown-Honeywell multi-channel temperature recorder was employed to monitor dry bulb and wet bulb temperatures at 30 second intervals during testing.

An Esterline-Angus Model A6010 temperature recorder was used to monitor and record soak area temperature.

A Sun Model EPA-75 HC/CO analyzer for measuring idle emissions.

2.5 EQUIPMENT QUALIFICATION, CALIBRATION AND CROSS-CHECK

Instrumentation and equipment were selected to meet the various types of exhaust emission tests. To insure the integrity of the test and validity of the data, a comprehensive quality control procedure was established jointly with EPA. In addition to daily and weekly routine calibrations all equipment was qualified and approved by EPA prior to the start of testing and after the completion of the test program. Additionally, continuing cross-checks were made throughout the performance of the program. The specific compliance criteria for the analytical console, chassis dynamometer, constant volume sampler and other equipment are described in the following paragraphs.

2.5.1 Constant Volume Sampler

The constant volume sampler (CVS) was calibrated in accordance with established procedures specified in the Federal Register.

The mass airflow was determined by means of a Meriam Laminar Flow element at 10 increments of flow. Incremental flow changes were effected by means of a valve situated between the laminar flow element and the CVS. The differential pressure across the mass pump was recorded for each increment of flow. The standard volume per revolution of the pump was calculated and plotted against the differential pressure in accordance with EPA's recommended procedures.

$$V_o = \frac{Q_s}{n} \cdot \frac{T_p}{530} \cdot \frac{406.8}{P_p}$$

where:

V_o = pump flow in cubic feet/pump revolution

Q_s = absolute flow rate thru LFE in SCFM

n = pump speed in rpm

T_p = absolute air temperature at pump inlet in °R

P_p = absolute pressure at pump inlet in inches of H_2O

The flow rate (Q_s) through the laminar flow element (LFE) was determined in accordance with the prescribed method set forth by the manufacturer. The LFE was calibrated prior to use by an independent laboratory with a method traceable to NBS.

$$Q_s = Q_i \times C_p \times C_V$$

where:

Q_i = indicated flow rate thru LFE in CFM

C_p = pressure correction factor

C_V = Viscosity-temperature correction factor

The CVS calibration curve was checked by injecting known amounts of propane into the CVS and calculating the propane recovery based upon the total air volume moved by the CVS pump and the flame ionization instrument response as shown by the sample calculation sheet in Figure 2-11. This form was also used to verify computer data reduction.

2.5.2 Emission Analysis Console

A daily procedure followed by GEC incorporated a leak check of the CVS bags concurrently with the analytical system. A self-sealing quick disconnect fitting was used at the junction between the CVS bags and the sample port of the CVS. The leak check was first performed on the analytical system by sealing the sample inlet port. Observation of analyzer flow meters for zero flow would indicate no leaks were present. In turn each evacuated CVS bag was subjected to this verification to ensure a zero flow existed.

EPA Propane Injection Calculation Sheet

$$V_{mix} = K_1 \times V_o \times N \times \frac{P_p}{T_p}$$

$$V_{mix} = .6947368 \times V_o \underline{\hspace{2cm}} \times N \underline{\hspace{2cm}} \times \frac{P_p}{T_p} \underline{\hspace{2cm}} = \underline{\hspace{2cm}}$$

$$HC_{mass} = V_{mix} \times 17.3 \times \frac{HC_{conc}}{1{,}000{,}000}$$

$$HC_{mass} = \underline{\hspace{2cm}} \times 17.3 \times \underline{\hspace{2cm}} = \underline{\hspace{2cm}}$$

Bar = __________ x 25.4 = mmHG ___________________

Inlet Dep. = __________ x 1.868 = mmHG ___________

P_p = Bar - inlet dep. ___________________________

T_p = 460 + temp. of exhaust gas __________________

Cyl Wt. Before __________

Cyl Wt. After ___________

Δ Wt. __________________

Calc. Wt. ______________

% Diff. _________________

FIGURE 2-11 PROPANE RECOVERY CALCULATION

The calibration of the analytical instrumentation consisted of establishing the manufacturer's operational parameters and then introducing gold standard gases to determine instrument response. The following ranges were established.

Carbon Monoxide	0-100 ppm
	0-500 ppm
	0-0.3 percent
	0-3 percent
Carbon Dioxide	0-4 percent
	0-8 percent
Total Hydrocarbons	0-50 ppm carbon
	0-100 ppm carbon
	0-300 ppm carbon
	0-1000 ppm carbon
	0-3000 ppm carbon
Nitrogen Oxides	0-100 ppm NOX
	0-250 ppm NOX
	0-1000 ppm NOX
	0-2000 ppm NOX

Weekly analytical checks were conducted to assure curve generation consistency.

The converter efficiency of the NOX analyzer was checked daily.

Two dual pen strip chart recorders complete the sample analytical system. One recorder monitored the output from the CO and CO_2 analyzers while the other monitored HC and NO/NOX. Each channel of the recorders provided a full scale deflection with 100 millivolts of input signal.

2.5.3 Chassis Dynamometer

The chassis dynamometer met the specifications contained in 35 Federal Register 219, Part II, 36 Federal Register 128 and the contract scope of work. The dynamometer was calibrated both for speed and road load horsepower.

Speedometer calibration was accomplished by accelerating the dynamometer to 46.3 miles per hour and measuring roller revolutions with a Strobotach. At 46.3 miles per hour the roller rpm was 1800 as specified by the manufacturer.

Road load horsepower (RLHP) calibration consisted of warming the dynamometer for 15 minutes at 30 mph with a non-test vehicle. This vehicle was then employed to accelerate the dynamometer rollers to 50 mph. This indicated road load horsepower at 50 mph was recorded. The vehicle then accelerated to an indicated 60 mph and the drive wheels physically lifted from the rollers with a pneumatic bumper jack. The coast time from 55 to 45 mph was determined by means of a Strobotach and stopwatch. Triplicate runs were conducted for several points over the working range. The following calculation was employed to determine the actual road load horsepower:

$$HP_d = (1/2)\ (W_1/32.2)\ (V_1^2 - V_2^2/550t)$$

$$= 0.06073\ \frac{(W_1)}{t}$$

where:

W_1 = equivalent inertia in pounds

V_1 = initial velocity in ft/sec (55 mph = 80.67 ft/sec)

V_2 = final velocity in ft/sec (45 mph = 66.00 ft/sec)

t = elapsed time for rolls to coast from 55 to 45 mph

Monthly several points were rechecked to ensure no change in excess of 1.0 RLPH had occurred since the initial calibration.

2.6 TEST PROCEDURES

2.6.1 Vehicle Preparation

Upon arrival at the laboratory each test vehicle was carefully inspected for exhaust system continuity, model size, engine size, number of carburetor venturis, general condition, condition of the emission control systems, and general drivability including brake condition. Each item was checked on a list as completed. The vehicle was then moved to the defuel/fuel area and the contents of the gas tank emptied into a labeled drum for waste gas by means of a high capacity fuel pump. Appropriate test fuel was then introduced to a level of 40 percent of tank capacity. Upon completion of the fueling each vehicle was driven over a prescribed 10 minute driving course to remove residual non-test fuel from the fuel lines, fuel pump, and carburetor. This run to the laboratory and the ten minute driving course comprised the initial test vehicle preparation.

The test vehicles were then placed inside the laboratory with the time and date recorded for the start of the temperature soak period. Between 12 and 20 hours from the start of the temperature soak period the test vehicle was hand-pushed onto the chassis dynamometer. Just prior to test each vehicle was reinspected to ensure that no change had occurred since the initial inspection. The vehicle tires were inflated to 45 pounds per square inch, the Hartzell cooling fan positioned and turned on, the hood opened, the CVS inlet connector attached to the vehicle tail pipe, and the driver's aide positioned outside the test vehicle near the driver's window.

2.6.2 Equipment Preparation

The dynamometer was warmed up prior to each day's testing. The CVS was turned on for a minimum of 20 minutes prior to use and the analytical instrumentation was turned on for at least 30 minutes prior to commencing leak checks and conducting the daily propane recovery test and NOX converter efficiency test. Flow rates were established for each instrument and zero gas response verified. Prior to introducing test samples all instruments were zeroed and spanned to ensure accurate sample response.

2.6.3 Federal Exhaust Emission Test Procedure

Exhaust emission tests were performed in accordance with the procedures specified in 37 Federal Register 221, November 15, 1972 (sections 85.075-9 through 85.075-24) and 36 Federal Register 128, July 2, 1971 (section 1201.85) as amended in 38 Federal Register 124, June 28, 1973.

2.6.3.1 Pretest Procedures

Prior to test all analytical instruments were turned on and allowed to warm up. The analyzers were zeroed and spanned for the desired range. The span control values were compared to previous readings recorded. The NOX to NO converter was checked for efficiency daily.

A propane recovery test was conducted daily prior to starting the vehicle tests. The propane recovery test consisted of injecting known amounts of instrument grade propane into the sample inlet of the CVS over a 15 minute period and collecting an aliquot of the diluted sample in a plastic (Tedlar) sample bag. Subsequent analysis of the diluted propane from the sample bag by flame ionization and a parallel sample from the air bag provided a means of calculating the recovery percent for the sampling system. A recovery within ± 2.0 percent of the weight of propane injected was experienced during the test phase of the program. At any time the 2% tolerance was exceeded, appropriate system checks were performed, the cause determined, and corrected. Two additional propane tests were then conducted to verify a recovery within 2 percent.

The analysis console and the sampling system (CVS) were leak checked daily to determine that the systems were airtight.

2.6.3.2 Test Procedure

The vehicle was manually placed on the dynamometer with the drive wheels situated on the rollers. The engine compartment cover was opened and the cooling fan turned on. The CVS and dynamometer were in a warmed up condition with the CVS pump running but not sampling and the heat exchanger steady at 110°F. The sample flow rates were adjusted and the flexible exhaust tube connected to the tail pipe. At the beginning of the test the pump revolution counter and sample collection were simultaneously started. After 15 seconds the vehicle was placed in gear and 20 seconds after the engine started the driving schedule commenced. At the 505 second point in the driving schedule the sample was directed into a second sample bag through the five second period after the final deceleration. Analysis of the 505 second bag commenced immediately. At the conclusion of the

test the sampling was stopped and the sample and air bags analyzed. The tail pipe connector was disconnected, the engine compartment cover closed and the cooling fan turned off. The interval between the cold start test and the hot start test was 10 minutes. The test procedure was repeated for the hot start test except only the hot transient portion was run.

2.6.4 Highway Fuel Economy Test Procedure

Exhaust emissions from 1975 model year vehicles were collected during a 10.2 mile, 765 second driving schedule. This data was used to compute the mile per gallon fuel economy during this simulated highway trip.

Each test was preceded by a soak period of not more than 35 minutes from the last period of cyclic operation. At the end of this soak period the vehicle was driven on the chassis dynamometer at a speed of 50 miles per hour for a period of three minutes. Within one minute of the end of this 50 mile per hour cruise the Highway Fuel Economy test was started. A CVS bag sample of the dilute exhaust and a second bag sample of the dilution air was collected over the entire driving schedule. Upon completion of the test the contents of each bag were analyzed for HC, CO, CO_2 and NOX concentration.

2.6.5 Modal Exhaust Emission Test Procedure

The modal exhaust emissions test procedure was comprised of two separate tests: the steady state and the Surveillance Driving Sequence. The test was preceded by a soak period of twenty minutes (max.) from the last sustained vehicle operation. At the end of the soak period the vehicle was operated on a chassis dynamometer at 50 mph for three minutes. During

this cruise the dynamometer speed and road load horsepower settings were checked and adjusted if necessary. Testing commenced within one minute of the end of the 50 mph cruise.

Steady state exhaust emissions were measured at 0, 5, 10, 15, 30, 45 and 60 mph using the CVS dilute bag collection technique. At each speed, equilibrium was maintained for at least 30 seconds before sampling was started. A bag sample of two cubic feet was collected over a period of five minutes.

After another soak and preconditioning period, described above, the modal sequence began. This driving schedule was made up of 65 steady state, acceleration, and deceleration modes. These modes are combined into a driving schedule established by EPA and called the Surveillance Driving Sequence (SDS). Figure 2-14 depicts the 65 modes with their speed and miles driven in the mode.

A special computer program was developed for the analysis of the 65 modes.

The mass emissions for the entire sequence were determined from the mass flow rate of the CVS and concentration of emissions in the bag.

A block diagram of the entire SDS procedure is shown in Figure 2-15.

2.6.6 Clayton Key Mode Emission Test Procedure

The Clayton Key Mode Test was conducted on the same 1975 model-year vehicles used in the Highway Fuel Economy and Modal Emission Tests.

This test consisted of three steady state operating conditions from which undiluted exhaust samples were analyzed for HC and CO. The

FIGURE 2-14 SURVEILLANCE DRIVING SEQUENCE

Mode No.	Speed (mph)	Time (sec)	Distance	Mode No.	Speed (mph)	Time (sec)	Distance
1	0-0	10	0.0000	34	0-45	22	0.1759
2	0-30	12	0.0602	35	45-45	15	0.1875
3	30-30	15	0.1250	36	45-15	16	0.1392
4	30-0	16	0.0741	37	15-15	15	0.0625
5	0-0	10	0.0000	38	15-45	18	0.1528
6	0-15	8	0.0201	39	45-45	15	0.1875
7	15-15	15	0.0625	40	45-0	19	0.1304
8	15-30	11	0.0705	41	0-0	10	0.0000
9	30-30	15	0.1250	42	0-60	25	0.2654
10	30-45	13	0.1360	43	60-60	15	0.2500
11	45-45	15	0.1875	44	60-0	28	0.2634
12	45-30	12	0.1268	45	0-0	10	0.0000
13	30-30	15	0.1250	46	0-30	15	0.0737
14	30-60	17	0.2163	47	30-30	15	0.1250
15	60-60	15	0.2500	48	30-60	25	0.3134
16	60-45	12	0.1716	49	60-60	16	0.2667
17	45-45	15	0.1875	50	60-30	18	0.2362
18	45-60	14	0.2043	51	30-30	16	0.1333
19	60-60	16	0.2667	52	30-0	10	0.0444
20	60-15	30	0.3367	53	0-0	10	0.0000
21	15-15	15	0.0625	54	0-60	38	0.4009
22	15-60	26	0.3136	55	60-60	15	0.2500
23	60-60	15	0.2500	56	60-0	35	0.3293
24	60-0	21	0.1973	57	0-0	10	0.0000
25	0-0	10	0.0000	58	0-30	18	0.0886
26	0-60	32	0.3313	59	30-30	15	0.1250
27	60-60	15	0.2500	60	30-60	21	0.2599
28	60-30	23	0.2924	61	60-60	15	0.2500
29	30-30	15	0.1250	62	60-30	14	0.1813
30	30-15	9	0.0579	63	30-30	15	0.1250
31	15-15	15	0.0625	64	30-0	13	0.0592
32	15-0	8	0.0175	65	0-0	12	0.0000
33	0-0	10	0.0000				

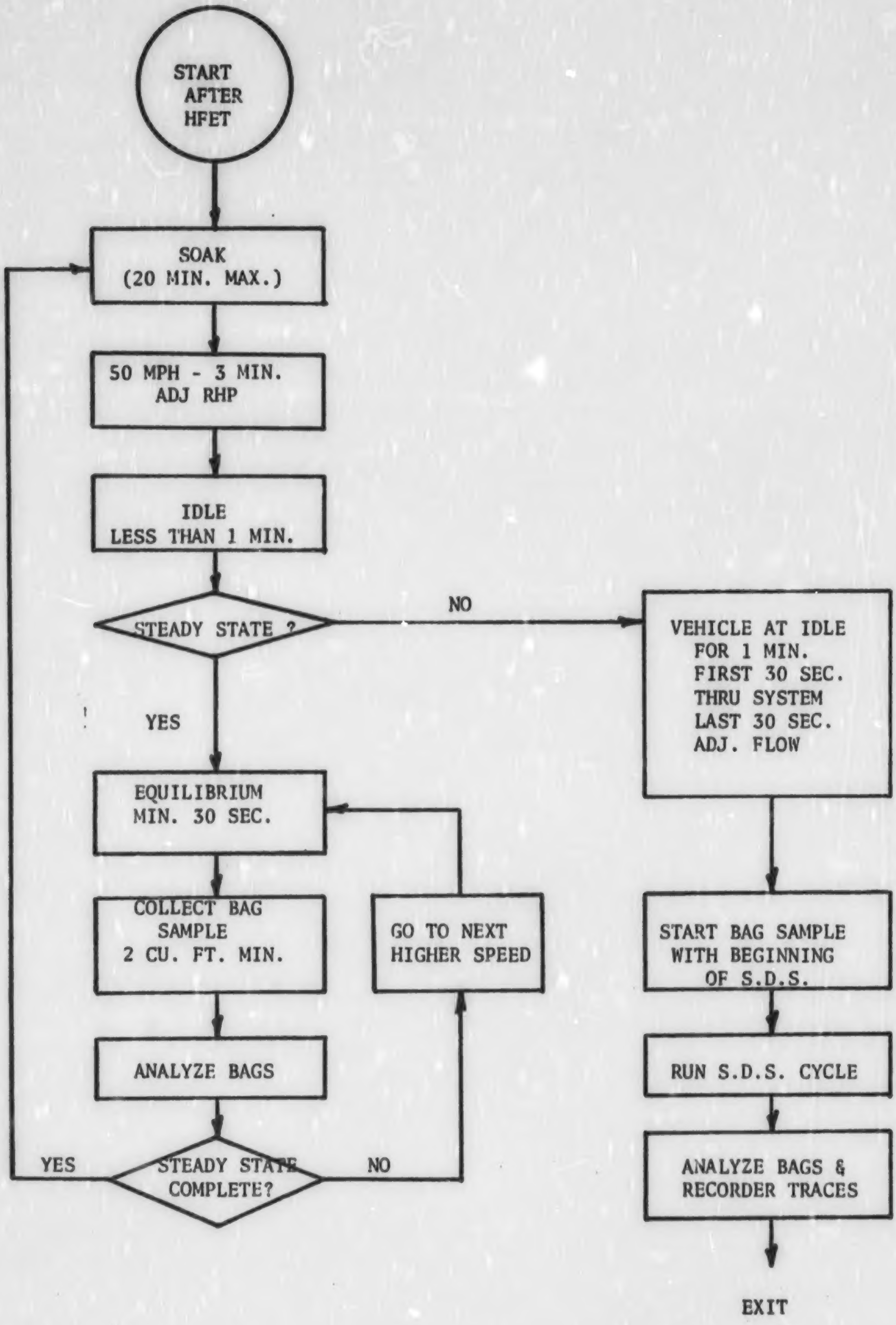

FIGURE 2-15 MODAL EMISSIONS TEST PROCEDURE

instrument used for measurement of undiluted exhaust emissions was the Sun EPA-75 and was capable of measuring HC in full-scale ranges of 0-500 and 0-2000 ppm (Hexane equivalent); and CO in full-scale ranges of 0-2.5 percent and 0-10 percent.

The test was preceded by a soak period of less than 20 minutes from the last sustained period of operation. Prior to the start of the test the road load horsepower was set. The vehicle was driven at each speed for a maximum of three minutes each. During testing exhaust gas was directed through the analyzer. Steady readings for HC and CO were obtained for 30 seconds prior to recording the readings. This test was repeated immediately after completion of the first test and followed the same procedure.

The test parameters for the Clayton Key Mode tests were as follows:

Vehicle Weight (NADA)	Transmission Range/Gear	Indicated RLHP @ MPH	High Speed MPH	Low Speed MPH	Idle
2000/2750	Drive/3rd	15 @ 38	36-38	22-25	Auto Trans. in Drive
2800/3750	Drive/High	24 @ 46	44-46	29-32	
3800/Up	Drive/High	30 @ 50	48-50	32-35	

2.6.7 Low Speed Cycle Emission Test Procedure

The low speed cycle emission test was conducted on twenty-five 1972 model year and thirty-five 1975 model year passenger cars.

This test, like the 1975 FTP, consists of a cold transient, a cold stabilized, a 10 minute soak and a hot transient portion. Unlike the FTP, the cold transient portion of the test is divided into two parts. The emissions from each were collected in individual sample bags and analyzed.

During the 10 minute soak the engine was shut down, the hood closed, the cooling fan turned off, and the tail pipe connector was disconnected.

Upon completion of the hot transient portion of the test the tail pipe connector was removed and the vehicle was placed in soak for the following day's testing.

Total driving time for the low speed test was 1962 seconds not including the 10 minute soak.

2.6.8 High Speed Cycle Emission Test Procedure

The high speed cycle emission test was conducted on the same 1972 and 1975 model year vehicles tested for low speed cycle emissions.

This test, like the FTP, was composed of a cold transient, a cold stabilized, and a hot transient portion. The hot transient portion was preceded by a 10 minute soak period. The emissions from each portion were collected in individual sample bags and analyzed within 10 minutes of the conclusion of that portion.

During the 10 minute soak after the cold stabilized portion of the test the test vehicle engine was shut down, the hood closed, the cooling fan turned off, and the tail pipe connector was disconnected.

Total driving time for the high speed test was 1918 seconds not including the 10 minute hot soak.

2.6.9 Aldehydes and Light Hydrocarbon Measurements

2.6.9.1 Aldehyde Measurements

The 3-methyl 2-benzothiazolinone hydrazone method (3 MBTH) was used. This is a sensitive colorimetric method for the determination of water soluble aliphatic aldehydes, measured as acetylaldehyde, in automotive exhaust. The aliphatic aldehydes react with 3 MBTH in the presence of ferric chloride to form a blue cationic dye which is read at 635 mμ with a spectrophotometer.

Dilute auto exhaust was sampled directly from the CVS using fritted samplers. Prior to sampling, however, the sample probes and manifolds were heated to 150°C. Matched sample bubblers were placed into an ice bath and connected to the sample manifold. After the sample solutions were properly chilled the sampler vacuum pump was run to insure vacuum stability. At the start of the FTP cold test, the dilute auto exhaust was drawn through the chilled absorbing solution using bubbler traps connected to a manifold. At the end of the cold-transient portion of the cycle (505 seconds), the manifold directed the flow of exhaust sample to a second pair of bubblers. This was the start of the cold-stabilized portion of the cycle. After 867 seconds, the bubblers were removed and the same procedure followed for the hot test portion. After collection, the samplers were allowed to stand at room temperature for two hours to complete the reaction of the aldehydes with the 3 MBTH. Aliquots of the sampler were then oxidized with ferric chloride and diluted to a final volume with acetone and the absorbency measured.

2.6.9.2 Light Hydrocarbon Measurements

Samples of the auto exhaust were collected under controlled conditions during the basic FTP exhaust emission test. The sample was drawn from the bag by a vacuum pump through an injection loop (IL) of the gas chromatograph (GC), see Figure 2-16. After the IL had been purged by the exhaust gas sample it was introduced into the analytical column of the GC. Simultaneously, the digital integrator was placed in the auto mode, preparing the system to record the presence of each component (methane, acetylene, benzene, ethane and propane) separated from the exhaust gas. Following the initial surge the elution from the column occurred over a six minute interval. At the end of this period the GC programmer automatically increased the oven temperature to hasten the elution of long-chain hydrocarbons in order to prepare for the next analysis.

2.6.10 Daily Test Schedule

The daily test schedule was generated by the Fleet Control Administrator. Owners were contacted by phone and requested to have their cars at the laboratory at a specified time. A schedule clerk prepared a schedule envelope, Figure 2-17, on which the reporting date and time were indicated. All recorder tracings and test documents were placed in this envelope which became the vehicle file folder. Upon completion of testing for each vehicle the schedule envelope was returned to the clerk who checked the contents and removed each vehicle tested from the needed vehicle list.

Normally, two eight-hour shifts were worked for the test phase. Cars were put into the soak area 12 hours prior to the commencement of each shift and removed from the laboratory area after testing.

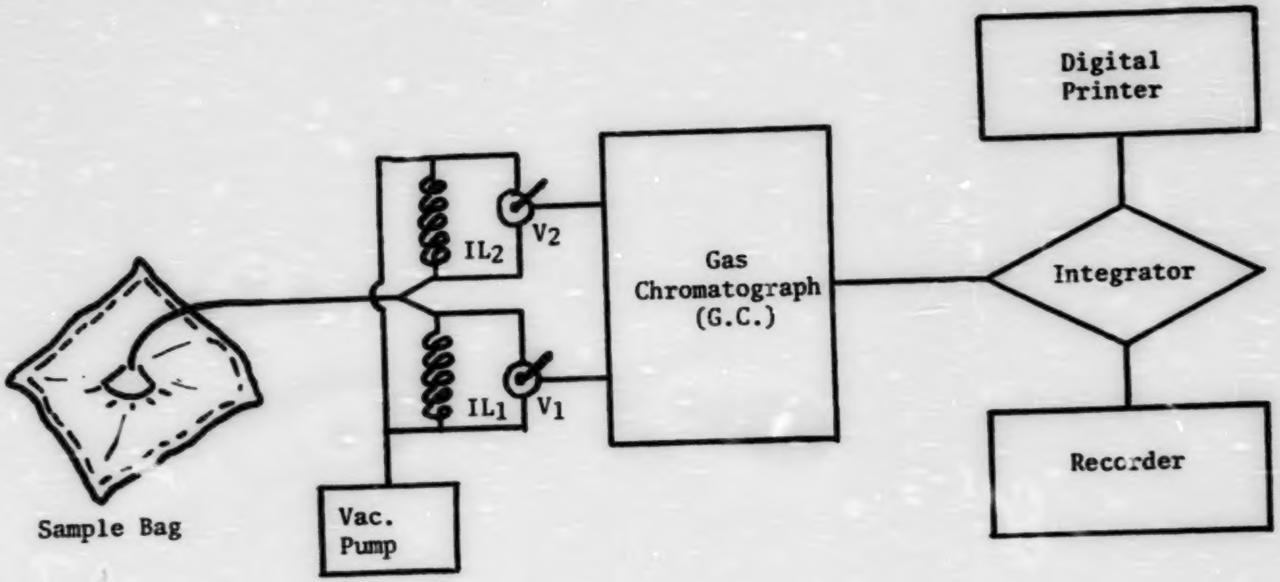

Sample Bag	- Plastic sample bag (holds sample of exhaust gas/air for analysis)
VP	- Vacuum pump (draws sample of exhaust gas/air from sample bag through the injection loop)
IL_1, IL_2	- Injection loop (permits reproducible constant volume of sample to be injected into gas chromatograph).
GC	- Gas chromatograph (contains analytical column which separates components of interest from sample).
Int.	- Digital integrator (integrates the areas contained under each component curve on the recorder).
Recorder	- Analog recorder (graphically indicates presence of individual components separated by the GC).
Printer	- Prints out the integration for each component and elution time.
V_1, V_2	- Two way valve (in first position the sample gas is drawn through the IL and discharged through the VP to atmosphere; GC system is isolated. In second position the IL is connected in series with the GC analytical column and contents of the IL are swept into the GC by the carrier gas).

FIGURE 2-16 GAS CHROMATOGRAPHIC SYSTEM FOR LIGHT HYDROCARBON ANALYSIS

2.7 DATA HANDLING

2.7.1 Data Collection

All required data was collected in worksheet form prior to data review and final report tabulation. Initial vehicle data (i.e., vehicle weight, engine CID, transmission type, etc.) was recorded on the Light Duty Emissions Data Sheet, Figure 2-17. During each test, analytical and CVS data were entered on a Computer Input Form, Figure 2-18. These documents comprised the primary source of input for the computer data reduction.

2.7.2 Data Processing

The test envelope for each vehicle was delivered to a data clerk who checked each data input form for accuracy and completeness. The on-site computer was then employed to calculate the data required for reporting. The computer output provided data which was recorded in a "data book" which became the source document for keypunching. A separate "data book" was generated for each vehicle tested. The data was keypunched and key verified from this input. The punched cards were checked against the source documents and keypunch errors and errors of entry were coded for immediate correction. Upon completion of this review the punched cards were forwarded to EPA and the source documents placed in the test file. Errors attributable directly to the testing program were eliminated by retest of the vehicle.

GEC Form 5050-50 General Environments Corporation Washington, D.C.

Light Duty Emissions Sheet

Vehicle Number ______________________________ Date/Time into Soak ______________

Run Number __________________________________ Date/Time Tested ________________

C.V.S. Operator ____________________________

Analysis System Operator ___________________

Test Driver ________________________________

Vehicle

Manufacturer __________________ Model ______________________ Year ______________

Transmission Type ______________________ Number of Speeds _______________________

Engine Displacement ____________________

Fuel Tank Capacity ______________________

Test Fuel Read. ________ gal.

Dynamometer

Make Clayton Model ECE-50 (DDVIF) Serial No. D-33152-A-513

Actual Road H.P. at 50 M.P.H. ____________________

Indicated Roadload Power Absorption at 50 M.P.H. ______________

Drive Wheel Tire Pressure __________________

Inertia ______________________

Does RLHP Include 10% ☐ Yes ☐ No

Sampling System Information

Serial No. 12789 Model CVS-45G Manufacturer Horiba

Type Water cooled heat exchanger

______________________________ ______________________________

Data Clerk/Date

FIGURE 2-17

F.T.P. 3 BAG DATA FORM

VEHICLE NO. ____________________ RUN NO. ____________ TEST DATE ____________________

SAMPLE BAG 1

DELTA P.	INDEP.	N.	TEMP.	BAR.			W°	D°

	HC	CO	CO_2	NOX
DIV.				
CURVE				

SAMPLE BAG 2

DELTA P.	INDEP.	N.	TEMP	BAR.			W°	D°

	HC	CO	CO_2	NOX
DIV.				
CURVE				

SAMPLE BAG 3

DELTA P.	INDEP.	N.	TEMP.	BAR.			W°	D°

	HC	CO	CO_2	NOX
DIV.				
CURVE				

AIR BAG 4

	HC	CO	CO_2	NOX
DIV.				
CURVE				

AIR BAG 5

	HC	CO	CO_2	NOX
DIV.				
CURVE				

FIGURE 2-18

2.7.3 Calculations of Results

2.7.3.1 Exhaust Emissions (Federal Test Procedure)

(1) Hydrocarbon Mass:

$$HCmass = Vmix \times DensityHC \times \frac{HCconc}{1{,}000{,}000}$$

(2) Carbon Monoxide Mass:

$$COmass = Vmix \times DensityCO \times \frac{COconc}{100}$$

(3) Oxides of Nitrogen Mass:

$$NOXmass = Vmix \times DensityNO_2 \times \frac{NOXconc}{1{,}000{,}000}$$

Meaning of symbols:

HCmass = Hydrocarbon emissions, in grams per vehicle mile.

DensityHC = Density of hydrocarbons in the exhaust gas, assuming an average carbon to hydrogen ratio of 1:1.85, in grams per cubic foot at 68°F. and 760 mm Hg pressure (16.33 gm/cu ft).

HCconc = Hydrocarbon concentration of the dilute exhaust sample minus hydrocarbon concentration of the dilution air sample, in ppm carbon equivalent, i.e., equivalent propane X 3.

COmass = Carbon monoxide emissions, in grams per vehicle mile.

DensityCO = Density of carbon monoxide in grams per cubic foot at 68°F. and 760 mm Hg pressure (32.97 gm/cu ft).

COconc = Carbon monoxide concentration of the dilute exhaust sample minus the carbon monoxide concentration of the dilution air sample, in volume percent.

NOXmass = Oxides of nitrogen emissions, in grams per vehicle mile.

$DensityNO_2$ = Density of oxides of nitrogen in the exhaust gas, assuming they are in the form of nitrogen dioxide, in grams per cubic foot at 68°F. and 760 mm Hg pressure (54.16 gm/cu ft).

NOXconc = Oxides of nitrogen concentration of the dilute exhaust sample minus the oxides of nitrogen concentration of the dilution air sample, in ppm.

Vmix = Total dilute exhaust volume in cubic feet per mile, corrected to standard conditions (528°R. and 760 mm Hg).

$$Vmix = K_1 \times V_0 \times N \times \frac{P_p}{T_p}$$

where: $K_1 = \frac{528°R}{760 \text{ mm Hg} \times 7.5 \text{ miles}} = 0.09263$

V_0 = Volume of gas pumped by the positive displacement pump, in cubic feet per revolution.

N = Number of revolutions of the positive displacement pump during the test while samples are being collected.

Pp = Absolute pressure of the dilute exhaust entering the positive displacement pump, in mm Hg, i.e., barometric pressure minus the pressure depression below atmospheric of the mixture entering the positive displacement pump.

T_p = Average temperature of dilute exhaust entering positive displacement pump during test while samples are being collected, in degrees Rankine.

K_H = Humidity correction factor.

$$K_H = \frac{1}{1 - 0.0047 \, (H - 75)}$$

where: H = Absolute humidity in grains of water per pound of dry air.

Example calculation of mass emission values:

Assume V_0 = 0.265 cu ft per revolution; N = 20,250 revolutions;

H = 85 grains per lb of dry air; P_p = 730 mm Hg; T_p = 550°R;

HCconc = 160 ppm carbon equivalent; COconc = 0.09%; and NOXconc = 70 ppm.

Then: Vmix = (0.09263) (0.265) (20.250) (730/550)= 659.8 cu ft per mile.

$$K_H = \frac{1}{1 - 0.0047 \, (85 - 75)} = 1.049.$$

(1) For a 1972 light-duty vehicle.

$$\text{HCmass} = 659.8 \times 16.33 \times \frac{160}{1{,}000{,}000} = 1.72 \text{ grams per vehicle mile}$$

$$\text{NOXmass} = 659.8 \times 54.16 \times \frac{70}{1{,}000{,}000} \times 1.049 = 2.62 \text{ grams per vehicle mile}$$

(2) For a 1972 utility vehicle.

$$\text{COmass} = 659.8 \times 32.97 \times \frac{0.09 \times 0.85}{100} = 16.6 \text{ grams per vehicle mile.}$$

36 Federal Register 128, 2 July 1971

Calculations for 1975 Light Duty Vehicles

(a) For light-duty vehicles:

$$Ywm = (0.43Yct + 0.57Yht + Ys)/7.5$$

where: Ywm = Weighted mass emissions of each pollutant, i.e., HC, CO, or NOX, in grams per vehicle mile.

Yct = Mass emissions as calculated from the "transient" phase of the cold start test, in grams per test phase.

Yht = Mass emissions as calculated from the "transient" phase of the hot start test, in grams per test phase.

Ys = Mass emissions as calculated from the "stabilized" phase of the cold start test, in grams per test phase.

(b) The mass of each pollutant for each phase of both the cold start test and the hot start test is determined from the following:

(1) Hydrocarbon Mass:

$$HCmass = Vmix \times DensityHC \times \frac{HCconc}{1,000,000}$$

(2) Carbon Monoxide Mass:

$$COmass = Vmix \times DensityCO \times \frac{COconc}{1,000,000}$$

(3) Oxides of Nitrogen Mass:

$$NOXmass = Vmix \times DensityNO_2 \times \frac{NOXconc}{1,000,000} \times K_H$$

(c) Meaning of symbols:

HCmass = Hydrocarbon emissions, in grams per test phase.

DensityHC = Density of hydrocarbons in the exhaust gas, assuming an average carbon to hydrogen ratio of 1:1.85, in grams per cubic foot at 68°F and 760 mm Hg pressure (16.33 gm/ft)

HCconc = Hydrocarbon concentration of the dilute exhaust sample corrected for background, in ppm carbon equivalent i.e., equivalent propane X 3.

$HCconc = HCe - HCd\ (1 - 1/DF)$

where: HCe = Hydrocarbon concentrations of the dilute exhaust sample as measured, in ppm carbon equivalent.

HCd = Hydrocarbon concentration of the dilution air as measured ppm carbon equivalent.

NOXmass = Oxides of nitrogen emissions, in grams per test phase.

$DensityNO_2$ = Density of oxides of nitrogen in the exhaust gas, assuming they are in the form of nitrogen dioxide, in grams per cubic foot at 68°F and 760 mm Hg pressure (54.16 gm/ft^3).

NOXconc = Oxides of nitrogen concentration of the dilute exhaust sample corrected for background in ppm.

$NOXconc = NOXe - NOXd\ (1 - 1/DF)$

where: NOXe = Oxides of nitrogen concentration of the dilute exhaust sample as measured in ppm.

NOXd = Oxides of nitrogen concentration of the dilution air as measured in ppm.

COmass = Carbon monoxide emissions, in grams per test phase.

DensityCO = Density of carbon monoxide in grams per cubic foot at 68°F and 760 mm Hg pressure (32.97 gm/ft^3).

COconc = Carbon monoxide concentration of the dilute exhaust sample corrected for background, water vapor and CO2 extraction in ppm.

$COconc = COe - COd\ (1 - 1/DF)$

where: COe = Carbon monoxide concentration of the dilute exhaust sample volume corrected for water vapor and carbon dioxide extraction in ppm. The calculation assumes the carbon to hydrogen ratio of the fuel is 1:1.85.

$COe = (1 - 0.01925CO2e - 0.000323R)\ COem$

where: COem = Carbon monoxide concentration of the dilute exhaust sample as measured in ppm.

CO2e = Carbon dioxide concentration of the dilute exhaust sample in mole percent.

R = Relative humidity of the dilution air in percent.

COd = Carbon monoxide concentration of the dilution air corrected for water vapor extraction in ppm.

$$COd = (1 - 0.000323R)\ COdm$$

where: COdm = Carbon monoxide concentration of the dilution air sample as measured in ppm.

$$DF = \frac{13.4}{CO2e + (HCe + COe) \times 10^{-4}}$$

Vmix = Total dilute exhaust volume in cubic feet per test phase corrected to standard conditions (528°R and 760 mm Hg).

$$Vmix = V_0 \times N \frac{(P_B - Pi)\ (528°R)}{(760\ mm\ Hg)\ (Tp)}$$

where: V_0 = Volume of gas pumped by the positive displacement pump, in cubic feet per revolution.

N = Number of revolutions of the positive displacement pump during the test phase while samples are being collected.

P_B = Barometric pressure in mm Hg.

Pi = Depression below atmosphere measured at the inlet to the positive displacement pump.

T_P = Average temperature of dilute exhaust entering positive displacement pump during test while samples are being collected, in degrees Rankine.

K_H = Humidity correction factor.

$$K_H = \frac{1}{1 - 0.0047\ (H - 75)}$$

where: H = Absolute humidity in grains of water per pound of dry air.

$$H = \frac{(43.478)\ Ra \times Pd}{P_B - Pd \times Ra/100}$$

Ra = Relative humidity of the ambient air, in percent.

Pd = Saturated vapor pressure, in mm Hg at the ambient dry bulb temperature.

(d) Example calculation of mass emission values:

(1) For the "transient" phase of the cold start test assume

V_0 = 0.29344 cu ft per revolution; N = 10,485; R = 48.0%;

R_a = 48.2%; P_B = 762 mm Hg; P_d = 22.225 mm Hg; P_i = 70 mm Hg;

T_p = 570°R; HC_e = 105.8 ppm carbon equivalent; NOX_e = 11.2 ppm;

CO_{em} = 306.6 ppm; CO_{2e} = 1.43%; HC_d = 12.1 ppm; NOX_d = 0.8 ppm;

CO_{dm} = 15.3 ppm. Then:

$$Vmix = \frac{(0.29344)\ (10{,}485)\ (762 - 70)\ (528)}{(760)\ (570)} = 2595.0 \text{ cu ft per test phase.}$$

$$H = \frac{(43.478)\ (48.2)\ (22.225)}{762 - (22.225 \times 48.2/100)} = 61.99$$

$$K_H = \frac{1}{1 - 0.0047\ (62 - 75)} = 0.9424.$$

$$CO_e = (1 - 0.01925\ (1.43) - 0.000323\ (48))\ 306.0 = 292.8 \text{ ppm.}$$

$$CO_d = (1 - 0.000323(48))\ 15.3 = 15.1 \text{ ppm.}$$

$$DF = \frac{13.4}{1.43 + (105.8 + 293.4) \times 10^{-4}} = 9.116.$$

HCconc = 105.8 - 12.1 (1 - 1/9.116) = 95.03.

HCmass = (2595) (16.33) (95.03/1,000,000) = 4.027 grams per test phase.

NOXconc = 11.2 - 0.8 (1 - 1/9.116) = 10.49.

NOXmass = (2595) (54.16) (10.49/1,000,000) (0.9424) = 1.389 grams per test phase.

COconc = 293.4 - 15.1 (1 - 1/9.116) = 280.

COmass = (2595) (32.97) (280/1,000,000) = 23.96 grams per test phase.

(2) For the "stabilized" portion of the cold start test assume that similar calculations resulted in HCmass = 0.62 grams per test phase; NOXmass = 1.27 grams per test phase; and COmass = 5.98 grams per test phase.

(3) For the "transient" portion of the hot start test assume that similar calculations resulted in HCmass = 0.51 grams per test phase; NOXmass = 1.38 grams per test phase; and COmass = 5.01 grams per test phase.

(4) For a 1975 light-duty vehicle:

$$HC_{wm} = ((0.43)\ (4.027) + (0.57)\ (0.51) + 0.62)/7.5$$

$= 0.352$ gram per vehicle mile.

$$NOX_{wm} = ((0.43)\ (1.389) + (0.57)\ (1.38) + 1.27)/7.5$$

$= 0.354$ gram per vehicle mile.

$$CO_{wm} = ((0.43)\ (23.96) + (0.57)\ (5.01) + 5.89)/7.5$$

$= 2.54$ grams per vehicle mile.

37 Federal Register 221, 15 November 1972

2.7.3.2 Highway Fuel Economy

The Highway Fuel Economy in miles per gallon was calculated for each test vehicle by the following:

1. Calculation of total sample volume of the mixture

$$Vmix = V_o \times K_1 \times N \times \frac{P_p}{T_p}$$

where V_o = volume of gas pumped by the positive displacement pump in cubic feet/pump revolution

$$K_1 = \frac{528°R}{760\ \text{mm Hg}} = .6947368$$

N = Revolutions of the pump during the test while samples are collected

P_p = Absolute Pressure of the dilute exhaust entering the pump in mm Hg

T_p = Average temperature of dilute exhaust entering the pump in degrees Rankine.

HCconc, COconc, CO2conc, and NOXconc were calculated as described in 2.7.3.1. Then the Highway Fuel Economy was calculated by:

$$MPG = \frac{2423}{0.866 \times \frac{HCconc}{10.242} + 0.429 \times \frac{COconc}{10.242} + 0.273 \times \frac{CO2conc}{10.242}}$$

where 10.242 = miles driven during test.

2.7.3.3 Modal Emissions

Values for each compound were computed from the output signal of each instrument.

(1) The output voltage (0-100 mv) is changed to equivalent recorder defection by:

$$x = V * 1000$$

where V = Volts from each analyzer

(2) Conversion from deflection to concentration was accomplished and corrected for background as follows:

$$Yconc = f(X) - A$$

where: f(X) is the appropriate calibration curve equation

A is the background concentration for the specific compound

(3) The average concentration for each mode was then computed as follows:

$$M_i = \frac{1}{n_i} \sum_{t=0}^{t=n_i} Yconc$$

where: t = time from start of mode

n_i = ith mode seconds

(4) The average grams per mile were then computed as follows:

$$Z_i = M_i * Vmix * D * \frac{1}{K_2} * \frac{1}{S_i}$$

where: i = mode number

Vmix = volume sample during mode corrected for temperature and pressure (SCFM)

D = appropriate compound density (GM/FT^3)

K_2 = units of detector sensitivity (100 for % or 1,000,000 for ppm)

S_i = ith mode distance in miles

(5) The total grams for each compound were computed

$$Z = \sum_{i=1}^{65} Z_i * S_i$$

(6) Finally the average grams per mile for each compound throughout the test were determined

Z avg/mile = Z/S

where: S = total distance

and compared to sample bag values collected during the Surveillance Driving Sequence.

(7) For the results to be acceptable the correlation should be within 25% for each compound

$$\text{Correlation } \% = \frac{Z-Z_{Bag}}{Z_{Bag}} * 100$$

2.7.3.4 Clayton Key Mode Emissions

No computations were conducted on data obtained during the Clayton Key Mode Emission Testing.

2.7.3.5 Low Speed Cycle Emissions

Calculation of the low speed cycle emission rates for 1972 and 1975 model year cars was accomplished as described in paragraph 2.7.3.1, except the final gram per mile values were computed as follows:

$$(1)\ 1972\ \text{gm/mi} = \frac{CT_1 + CT_2 + CS}{\text{Test Miles}}$$

and

$$1975\ \text{gm/mi} = \frac{.43(CT_1+CT_2) + .57(HT) + CS}{\text{Test Miles}}$$

where: CT_1 = grams in 1st part of cold transient

CT_2 = grams in 2nd part of cold transient

CS = grams in cold stabilized

HT = grams in hot transient

2.7.3.6 High Speed Cycle Emissions

The final gram per mile emission rates during the high speed cycle were computed as described in paragraph 2.7.3.1 substituting the miles traveled during the high speed test.

2.7.3.7 Aldehyde and Light Hydrocarbon Emissions

2.7.3.7.1 Aliphatic Aldehyde Emissions

The ppm aldehyde concentrations were determined by the following equation:

$$\text{ppm} = \frac{(TSA)(1/0.60 \times 22.4)}{SFR} \times \frac{1.2}{t_s} \times \frac{273}{T_s} \times \frac{P_s}{P}$$

where:

$TSA = TBA \#1 + TBA \#2$

TSA = total sample absorbence

TBA = total bubbler absorbence

TBA = absorbency read per sample multiplied by the aliquot per sample

e.g. bubbler #1: 25 cc sample volume, 10 cc aliquot

$TBA \#1 = Abs \times 2.5$

bubbler #2: 25 cc sample volume, 10 cc aliquot

$TBA \#2 = Abs \times 2.5$

$TSA = Abs \#1 \times 2.5 + Abs \#2 \times 2.5$

SFR = sample flow rate

t_s = sample time

T_s = sample temperature °K

$P_s = P_B - P_i$

P_B = Barometer in mm Hg

P_i = depression at pump inlet in mm Hg

P = 760 mm Hg

Final computation of grams per mile was accomplished as described in section 2.7.3.1.

2.7.3.7.2 Light Hydrocarbon Emissions

Hydrocarbon concentrations were calculated by the following equations:

(1) $$HC_{ppm} = \frac{C_s}{B}$$

where: C_s = sample counts from integrator

B = counts per part per million

then

(2) $$HCmass = Vmix \times Density \times \frac{HC_{ppm} - air_{ppm}}{1,000,000}$$

Final gram per mile values for each light hydrocarbon were then calculated as described in section 2.7.3.1. The calculated light hydrocarbon densities were computed from values obtained from the Handbook of Chemistry and Physics, 46th Edition (1965-66).

Compound	Density @ 20°C & 760 mm Hg
Methane	18.880 gm/cu. ft.
Acetylene	30.651 gm/cu. ft.
Benzene	91.942 gm/cu. ft.
Ethane	35.394 gm/cu. ft.
Propane	51.942 gm/cu. ft.

SECTION 3

DISCUSSION OF TEST RESULTS

3.1 FEDERAL TEST PROCEDURE EMISSIONS AND FUEL ECONOMY

A review of current vehicle emission rates for 1972, 1974, and 1975 model year passenger cars exhibits a continuing decrease in mass emission rates for HC, CO, and NOXC. When contrasted with current emission rates for 1972 model year cars, emission rates for 1975 model year cars were lower by 74.1 percent for HC, 62.9 percent for CO and 36.3 percent for NOXC.

Carbon dioxide emissions, while not considered a pollutant, were 10.3 percent greater.

Fuel economy values as determined by carbon balance during the Federal Test Procedure demonstrate a decrease in fuel economy for 1975 model year cars of 0.3% over current 1972 model year cars and increase of 8.0% over current 1974 model year.

The current 1974 model year average fuel economy was 7.7% less than the average current fuel economy for 1972 model year cars.

The average emission rates for 10, 1975 model year light duty trucks were 35.2% higher for HC, 3.1% lower for CO, and 24.7% higher for NOXC when compared to similar data on passenger cars. The fuel economy for light duty trucks was found to be 4.0% lower than for passenger cars.

Of all the cars tested, 48% were found to be in compliance with the 1972 Federal Emissions Standards for HC and CO, 26% were in compliance with the 1973/1974 Federal Emissions Standards for HC, CO, and NOXC, while 16% were able to meet the 1975 Federal Emissions Standards.

During this program 28% of the 1972 model year cars tested were found to be in compliance with the 1972 Standards, 13% of the 1974 model year cars tested complied with the 1973/1974 Standards, and 40% of the 1975 model year cars tested were in compliance with the 1975 Standards.

40% of the 1975 light duty trucks tested were found to be in compliance with the 1975 Standards.

3.2 Highway Fuel Economy

The average highway fuel economy for 35, 1975 model year cars was determined to be 20.01 miles per gallon.

The average highway fuel economy for 10, 1975 model year light duty trucks was determined to be 16.96 miles per gallon.

3.3 Modal Emissions and Fuel Economy

During the steady state portion of the modal emissions test, the highest average peak fuel economy occurred at the 30 mile per hour steady state mode for 45, 1975 model year light duty vehicles.

3.4 Clayton Key Mode Emissions

During testing of 45, 1975 model year light duty vehicles the Clayton Key Mode Test was immediately followed with a replicate Clayton Key Mode Test. The values obtained for HC and CO for a high speed state, a low speed state and at idle generally agreed quite closely.

3.5 Low Speed Cycle Emissions and Fuel Economy

The average HC, CO, and NOXC emission rates for 35, 1975 model year cars were found to be lower than the average emission rates for 25, 1972 model year cars by 67.1%, 56.7%, and 38.7% respectively. The carbon dioxide (CO_2) emission rate increased by 11.8%. This increase in

CO_2 emission rate for 1975 model year cars resulted in the carbon balance fuel economy differing from the carbon balance fuel economy for 1972 model year cars by less than .01 miles per gallon.

3.6 High Speed Cycle Emissions and Fuel Economy

The 1975 model year cars emission rates for HC, CO, and NOXC were found to be lower than the values found for 1972 model year cars by 81%, 61.7%, and 40.4% respectively.

Both the 1972 and 1975 model year cars demonstrated a carbon balance fuel economy of 17.19 miles per gallon.

3.7 Aldehyde and Light Hydrocarbon Emissions

While at the present there are no Federal Emission Standards for light hydrocarbon, aliphatic aldehydes, it is interesting to note that the average emission rates for methane, ethane, benzene, acetylene and aliphatic aldehydes were consistently higher for 1975 model year cars when compared to 1975 model year trucks.

The light hydrocarbon propane was not found in detectable quantities in either cars or light duty trucks.

SECTION 4

ACKNOWLEDGMENTS

The support of this program by the EPA, Division of Emission Control Technology, is acknowledged. A very special acknowledgment to Mr. John White III, EPA Project Manager, and Messrs. Tom Bejma, Project Officer, Matt Macocha and John Shelton for their prompt and courteous assistance. Appreciation is expressed to Mesdames Gaye Daugherty and Peggy Hale of GEC for their assistance in the preparation of tables and appendices contained in this report.

TABLE 1

SUMMARY OF VEHICLE MAKES

(EPA100)

WASHINGTON, D.C.

	1972	1974	1975	TOTAL
LIGHT-DUTY TRUCKS				
CHEVROLET			4	4
DODGE			1	1
FORD			4	4
GMC			1	1
DOMESTICS				
AMC	1	1	1	3
BUICK	1	2	3	6
CADILLAC	1		1	2
CHEVROLET	6	6	6	18
CHRYSLER			1	1
DODGE	1	2	2	5
FORD	5	5	5	15
LINCOLN		1		1
MERCURY	1	1	2	4
OLDSMOBILE	1	3	3	7
PLYMOUTH	2	2	2	6
PONTIAC	2	2	3	7
IMPORTS				
CAPRI			1	1
DATSUN	1	1	1	3
HONDA			1	1
MAZDA		1		1
TOYOTA	1	1	1	3
VW	2	2	2	6
TOTALS	25	30	45	100

TABLE 2

SUMMARY OF TEST VEHICLE CHARACTERISTICS
BY MODEL YEAR

WASHINGTON, D.C.

	1972 CARS	1974 CARS	1975 CARS	1975 TRUCKS	TOTALS
INERTIA WEIGHTS (LBS)					
1750					
2000		1	2		3
2250	3	2	2		7
2500	3	2	1		6
2750	2	2	2		6
3000	1	4	2		7
3500	5	3	4		12
4000	1	4	7	7	19
4500	8	7	6	2	23
5000	2	4	6	1	13
5500		1	3		4
ENGINE DISPLACEMENT (CUBIC INCHES)					
UNDER 251	8	11	13	1	33
251-330	3	3	2	3	11
331-399	8	10	10	6	34
OVER 399	6	6	10		22
NUMBER OF ENGINE CYLINDERS					
4	6	6	8		20
6	3	4	6	2	15
8	16	19	21	8	64
ROTARY		1			1
TOTALS	25	30	35	10	100

TABLE 3

EXHAUST EMISSION TEST RESULTS VS. MODEL YEAR

WASHINGTON, D.C.

1972 FEDERAL TEST PROCEDURE

	N	AVERAGE MILEAGE	HC	CO	CO_2	NOXC	FUEL ECONOMY FTP	FUEL ECONOMY HWFET
1972	25	39179	5.31	53.39	593.2	4.66	12.78	.00
1974	30	19790	4.00	47.49	657.9	3.40	11.90	.00
1975	35	11058	1.60	22.93	647.9	3.02	12.87	20.01
TOTALS	90	21780	3.43	39.58	636.0	3.60	12.51	20.01

1975 FEDERAL TEST PROCEDURE

	N	AVERAGE MILEAGE	HC	CO	CO_2	NOXC	FUEL ECONOMY FTP	FUEL ECONOMY HWFET
1972	25	39179	4.82	45.75	567.3	4.65	13.55	.00
1974	30	19790	3.46	40.71	633.7	3.38	12.51	.00
1975	35	11058	1.25	16.98	625.7	2.96	13.51	20.01
TOTALS	90	21780	2.98	32.88	612.1	3.57	13.17	20.01

EMISSION RESULTS IN GRAMS PER MILE. FUEL ECONOMY IN MILES PER GALLON

TABLE 4

EXHAUST EMISSION TEST RESULTS FOR 1975 LIGHT DUTY TRUCKS

WASHINGTON, D.C.

1972 FEDERAL TEST PROCEDURE

	N	AVERAGE MILEAGE	HC	CO	CO2	NOXC	FUEL FTP	ECONOMY HFET
	10	8230	1.99	22.45	680.9	3.95	12.27	16.96
TOTALS	10	8230	1.99	22.45	680.9	3.95	12.27	16.96

1975 FEDERAL TEST PROCEDURE

	N	AVERAGE MILEAGE	HC	CO	CO2	NOXC	FUEL FTP	ECONOMY HFET
	10	8230	1.69	16.45	652.6	3.69	12.97	16.96
TOTALS	10	8230	1.69	16.45	652.6	3.69	12.97	16.96

EMISSION RESULTS IN GRAMS PER MILE.   FUEL ECONOMY IN MILES PER GALLON

TABLE 5

VEHICLES MEETING FEDERAL STANDARDS

WASHINGTON, D C

1972 FEDERAL STANDARDS

	N	HC =<3.4 GM/MI NO	HC PCT	CO =<39 GM/MI NO	CO PCT	PASSED BOTH NO	PASSED BOTH PCT
1972	25	11	44	10	40	7	28
1974	30	8	27	13	43	5	17
1975	35	33	94	31	89	31	89
TOTALS	90	52	58	54	60	43	48

1973/1974 FEDERAL STANDARDS

	N	HC =<3.4 GM/MI NO	HC PCT	CO =<39 GM/MI NO	CO PCT	NOX =<3.0 GM/MI NO	NOX PCT	PASSED ALL THREE NO	PASSED ALL THREE PCT
1972	25	11	44	10	40	2	3		
1974	30	8	26	13	43	16	53	4	13
1975	35	33	94	31	89	21	60	19	55
TOTALS	90	52	58	54	60	39	44	23	26

1975 FEDERAL STANDARDS

	N	HC =<1.5 GM/MI NO	HC PCT	CO =<15 GM/MI NO	CO PCT	NOX =<3.1 GM/MI NO	NOX PCT	PASSED ALL THREE NO	PASSED ALL THREE PCT
1972	25			2	3	5	20		
1974	30					17	57		
1975	35	26	75	23	66	22	63	14	40
TOTALS	90	26	29	25	28	44	49	14	16

TABLE 6

1975 LIGHT-DUTY TRUCKS MEETING FEDERAL STANDARDS

WASHINGTON, D C

1975 FEDERAL STANDARDS

		HC =<2.0 GM/MI		CO =<20 GM/MI		NOX =<3.1 GM/MI		PASSED ALL THREE	
	N	NO	PCT	NO	PCT	NO	PCT	NO	PCT
CHEVROLET	4	4	100	4	100	3	75	3	75
DODGE	1								
FORD	4	2	50	3	75	1	25	1	25
GMC	1								
TOTALS	10	6	60	7	70	4	40	4	40

TABLE 7

1972 VEHICLES MEETING 1972 FEDERAL STANDARDS

WASHINGTON, D C

1972 FEDERAL TEST PROCEDURE

		HC =<3.4 GM/MI		CO =<39 GM/MI		PASSED BOTH	
	N	NO.	PCT	NO.	PCT	NO.	PCT
DOMESTICS							
AMC	1	1	100	1	100	1	100
BUICK	1	1	100	1	100	1	100
CADILLAC	1						
CHEVROLET	6	3	50	3	50	2	33
DODGE	1	1	100	1	100	1	100
FORD	5	4	80	2	40	2	40
MERCURY	1						
OLDSMOBILE	1						
PLYMOUTH	2	1	50				
PONTIAC	2						
IMPORTS							
DATSUN	1			1	100		
TOYOTA	1			1	100		
VW	2						
TOTALS	25	11	44	10	40	7	28

TABLE 8

1974 VEHICLES MEETING 1974 FEDERAL STANDARDS

WASHINGTON, D C

1974 FEDERAL TEST PROCEDURE

		HC =<3.4 GM/MI		CO =<39 GM/MI		NOXC =<3.0 GM/MI		PASSED ALL THREE	
	N	NO.	PCT	NO.	PCT	NO.	PCT	NO.	PCT
DOMESTICS									
AMC	1			1	100				
BUICK	2			1	50	1	50		
CHEVROLET	6	3	50	2	33	4	66	2	33
DODGE	2								
FORD	5	1	20	1	20	3	60		
LINCOLN	1	1	100	1	100	1	100	1	100
MERCURY	1	1	100			1	100		
OLDSMOBILE	3	1	33	3	100	1	33		
PLYMOUTH	2					1	50		
PONTIAC	2			1	50				
IMPORTS									
DATSUN	1	1	100	1	100	1	100	1	100
MAZDA	1			1	100	1	100		
TOYOTA	1			1	100				
VW	2					2	100		
TOTALS	30	8	26	13	43	16	53	4	13

TABLE 9

1975 VEHICLES MEETING 1975 FEDERAL STANDARDS

WASHINGTON, D C

1975 FEDERAL TEST PROCEDURE

	N	HC =<1.5 GM/MI NO.	HC PCT	CO =<15.0 GM/MI NO.	CO PCT	NOXC =<3.1 GM/MI NO.	NOXC PCT	PASSED ALL THREE NO.	PASSED ALL THREE PCT
DOMESTICS									
AMC	1			1	100				
BUICK	3	3	100	1	33	2	66		
CADILLAC	1	1	100			1	100		
CHEVROLET	6	4	66	4	66	5	83	3	50
CHRYSLER	1	1	100			1	100		
DODGE	2	1	50	1	50				
FORD	5	5	100	5	100	5	100	5	100
MERCURY	2			1	50				
OLDSMOBILE	3	3	100	2	66	2	66	1	33
PLYMOUTH	2	1	50	1	50				
PONTIAC	3	3	100	2	66	2	66	2	66
IMPORTS									
CAPRI	1	1	100	1	100	1	100	1	100
DATSUN	1	1	100	1	100				
HONDA	1	1	100	1	100	1	100	1	100
TOYOTA	1			1	100				
VW	2	1	50	1	50	2	100	1	50
TOTALS	35	26	74	23	65	22	62	14	40

TABLE 10

SUMMARY OF MODAL EMISSIONS RESULTS ON
FORTY-FIVE 1975 MODEL-YEAR VEHICLES

WASHINGTON, D.C.

MODE NUMBER	FROM-TO (MPH)	DISTANCE (MILES)	TIME IN MODE (SEC)	HC	CO	CO2	NOX	FUEL ECONOMY
01	00 - 00	.0000	10	.21	3.81	100.0	.12	83.23
02	00 - 30	.0602	12	2.76	42.00	1,269.3	13.34	6.60
03	30 - 30	.1250	15	1.27	9.68	445.1	1.74	19.11
04	30 - 00	.0741	16	1.09	9.95	434.0	.80	19.59
05	00 - 00	.0000	10	.20	3.06	97.9	.11	85.92
06	00 - 15	.0201	8	2.39	35.42	1,299.5	6.53	6.51
07	15 - 15	.0625	15	1.03	13.58	542.0	.93	15.66
08	15 - 30	.0705	11	1.61	16.61	831.0	7.38	10.29
09	30 - 30	.1250	15	.55	7.63	440.8	1.68	19.52
10	30 - 45	.1360	13	.81	10.87	715.6	8.90	12.07
11	45 - 45	.1875	15	.59	4.89	478.2	3.10	18.19
12	45 - 30	.1268	12	1.02	3.95	286.4	1.20	30.00
13	30 - 30	.1250	15	1.00	6.21	348.9	1.05	24.53
14	30 - 60	.2163	17	1.94	72.47	852.9	11.18	9.12
15	60 - 60	.2500	15	.59	13.14	597.5	6.20	14.31
16	60 - 45	.1716	12	1.01	4.54	338.3	2.19	25.46
17	45 - 45	.1875	15	.59	4.14	380.5	1.93	22.82
18	45 - 60	.2043	14	.71	19.01	722.3	10.84	11.76
19	60 - 60	.2667	16	.35	7.30	568.1	6.33	15.28
20	60 - 15	.3367	30	1.01	4.46	311.5	1.66	27.59
21	15 - 15	.0625	15	1.39	21.53	475.9	.71	17.26
22	15 - 60	.3136	26	1.60	40.87	938.3	13.23	8.80
23	60 - 60	.2500	15	.32	6.43	555.8	6.43	15.65
24	60 - 00	.1973	21	1.36	5.89	343.1	1.56	24.88
25	00 - 00	.0000	10	.21	3.60	102.1	.18	81.88
26	00 - 60	.3313	32	1.42	37.60	982.8	14.36	8.48
27	60 - 60	.2500	15	.31	5.90	548.1	6.56	15.89
28	60 - 30	.2994	23	1.10	4.71	296.4	1.56	28.88
29	30 - 30	.1250	15	.62	8.13	349.1	1.09	24.39
30	30 - 15	.0579	9	.76	10.65	330.9	.59	25.36
31	15 - 15	.0625	15	.87	17.43	444.2	.49	18.71
32	15 - 00	.0173	8	1.43	31.46	796.9	.86	10.43
33	00 - 00	.0000	10	.23	4.96	101.8	.16	80.49
34	00 - 45	.1759	22	1.55	38.86	1,018.6	12.17	8.18
35	45 - 45	.1875	15	.35	7.74	451.9	2.75	19.08
36	45 - 15	.1392	16	1.01	7.66	319.5	.73	26.51
37	15 - 15	.0625	15	1.10	17.75	463.5	.68	17.93
38	15 - 45	.1528	18	1.39	33.06	923.4	11.50	9.05
39	45 - 45	.1875	15	.38	9.02	474.9	2.82	18.10
40	45 - 00	.1304	19	1.22	8.82	355.2	.76	23.80
41	00 - 00	.0000	10	1.16	5.93	106.3	.22	74.43
42	00 - 60	.2654	25	2.55	91.76	1,066.2	13.37	7.28
43	60 - 60	.2500	15	.44	9.94	555.3	6.01	15.50
44	60 - 00	.2634	28	1.32	8.09	322.1	1.43	26.18
45	00 - 00	.0000	10	.24	5.60	101.9	.17	79.67

EMISSION RESULTS IN GRAMS PER MILE (PER MINUTE FOR IDLE)
FUEL ECONOMY IN MILES PER GALLON (MINUTES PER GALLON FOR IDLE)

TABLE 10 (CONTINUED)

SUMMARY OF MODAL EMISSIONS RESULTS ON
FORTY-FIVE 1975 MODEL-YEAR VEHICLES

WASHINGTON, D.C.

MODE NUMBER	FROM-TO (MPH)	DISTANCE (MILES)	TIME IN MODE (SEC)	HC	CO	CO2	NOX	FUEL ECONOMY
46	00 - 30	.0737	15	1.86	45.80	1,083.5	10.94	7.64
47	30 - 30	.1250	15	.59	13.07	425.4	1.58	19.82
48	30 - 60	.3134	25	.91	28.06	779.2	11.06	10.74
49	60 - 60	.2667	16	.38	9.30	544.1	6.05	15.85
50	60 - 30	.2362	18	1.22	6.85	287.6	1.39	29.37
51	30 - 30	.1333	16	.77	10.92	341.8	.99	24.56
52	30 - 00	.0444	10	1.19	20.83	429.1	.71	19.06
53	00 - 00	.0000	10	.27	6.06	102.8	.19	78.46
54	00 - 60	.4009	38	1.18	32.33	888.1	12.24	9.41
55	60 - 60	.2500	15	.37	8.34	534.2	6.07	16.18
56	60 - 00	.3293	35	1.26	8.80	329.3	1.35	25.57
57	00 - 00	.0000	10	.27	6.48	106.1	.21	75.81
58	00 - 30	.0886	18	2.02	44.86	1,064.3	7.83	7.77
59	30 - 30	.1250	15	.92	15.37	413.4	1.69	20.15
60	30 - 60	.2599	21	1.52	51.25	832.8	11.84	9.66
61	60 - 60	.2500	15	.56	13.83	558.3	5.77	15.25
62	60 - 30	.1813	14	1.25	7.79	286.1	1.30	29.36
63	30 - 30	.1250	15	.78	12.57	338.6	.99	24.60
64	30 - 00	.0592	13	1.16	20.55	427.6	.66	19.14
65	00 - 00	.0000	12	.24	6.04	103.0	.17	78.41
TOTAL CALCULATED RESULTS				1.04	20.15	593.4	5.73	14.12
TOTAL BAG RESULTS				.99	19.47	579.4	5.30	14.47
66	IDLE			.24	3.98	89.6	.10	91.91
67	5 MPH STEADY STATE			2.82	39.65	1,076.4	.99	7.73
68	10 MPH STEADY STATE			2.15	22.01	649.2	.65	12.85
69	15 MPH STEADY STATE			.95	15.15	481.1	.55	17.47
70	30 MPH STEADY STATE			.56	6.80	380.4	1.37	22.59
71	45 MPH STEADY STATE			.27	3.69	417.4	2.43	20.93
72	60 MPH STEADY STATE			.30	6.87	487.3	5.57	17.78

EMISSION RESULTS IN GRAMS PER MILE (PER MINUTE FOR IDLE)
FUEL ECONOMY IN MILES PER GALLON (MINUTES PER GALLON FOR IDLE)

TABLE 11

SUMMARY OF CLAYTON KEYMODE AND REPLICATE
EMISSION RESULTS BY VEHICLE MAKES

WASHINGTON, D.C.

VEHICLE MAKES		-HIGH HC	SPEED- CO	-LOW HC	SPEED- CO	- IDLE HC	- CO
LIGHT-DUTY TRUCKS							
CHEVROLET	1ST TEST	29	.02	22	.02	16	.02
	2ND TEST	27	.02	22	.03	19	.02
DODGE	1ST TEST	60	.16	120	.16	190	2.60
	2ND TEST	50	.16	120	.18	205	3.10
FORD	1ST TEST	42	.10	45	.09	76	.12
	2ND TEST	36	.10	46	.09	76	.13
GMC	1ST TEST	90	.19	130	.19	165	1.10
	2ND TEST	90	.19	120	.18	200	1.00
AVERAGE FOR:	TRUCKS	41	.09	52	.08	76	.45
DOMESTICS							
AMC	1ST TEST	33	.17	56	.17	180	1.75
	2ND TEST	35	.17	60	.17	185	1.65
BUICK	1ST TEST	95	2.11	116	2.69	141	3.43
	2ND TEST	76	1.31	106	1.94	136	2.98
CADILLAC	1ST TEST	150	4.70	110	2.50	30	.05
	2ND TEST	130	3.70	100	2.40	30	.04
CHEVROLET	1ST TEST	33	.10	64	.42	132	2.13
	2ND TEST	23	.07	35	.10	142	2.13
CHRYSLER	1ST TEST	30	.05	20	.03	20	.05
	2ND TEST	20	.05	20	.05	20	.05
DODGE	1ST TEST	35	.07	87	.74	160	5.01
	2ND TEST	37	.06	80	.87	157	4.96
FORD	1ST TEST	30	.16	27	.12	39	.26
	2ND TEST	27	.19	26	.10	37	.27

HC - PPM/HEX
CO - %

TABLE 11

SUMMARY OF CLAYTON KEYMODE AND REPLICATE EMISSION RESULTS BY VEHICLE MAKES

WASHINGTON, D.C.

VEHICLE MAKES		-HIGH HC	SPEED- CO	-LOW HC	SPEED- CO	- IDLE HC	- CO
MERCURY	1ST TEST	38	.60	31	.74	34	.87
	2ND TEST	36	.64	31	.84	41	1.38
OLDSMOBILE	1ST TEST	74	1.57	66	.55	40	.47
	2ND TEST	57	1.22	58	.42	103	.51
PLYMOUTH	1ST TEST	32	.03	27	.03	60	1.26
	2ND TEST	32	.03	30	.03	57	1.26
PONTIAC	1ST TEST	61	.09	38	.07	98	1.33
	2ND TEST	32	.04	32	.04	86	1.14
AVERAGE FOR:	DOMESTICS	46	.60	52	.59	89	1.54
IMPORTS							
CAPRI	1ST TEST	25	.05	25	.03	20	.03
	2ND TEST	25	.05	25	.03	25	.03
DATSUN	1ST TEST	83	.20	87	.16	86	.35
	2ND TEST	69	.20	84	.16	81	.35
HONDA	1ST TEST	15	.20	10	.15	25	.45
	2ND TEST	15	.20	10	.15	30	.45
TOYOTA	1ST TEST	70	.33	40	.60	40	.57
	2ND TEST	70	.29	40	.50	40	.60
VW	1ST TEST	60	.77	370	.05	210	.18
	2ND TEST	70	.82	262	1.01	110	.41
AVERAGE FOR:	IMPORTS	53	.39	132	.33	82	.34
AVERAGE FOR ALL MAKES		46	.36	78	.33	82	.77

HC - PPM/HEX
CO - %

TABLE 12

SUMMARY RESULTS OF LOW SPEED DRIVING CYCLE

WASHINGTON, D.C.

VEHICLE YEAR	NUMBER TESTED	HC	CO	CO2	NOXC	FUEL ECONOMY (MPG)
		1972 FEDERAL TEST PROCEDURE WEIGHTING FACTORS				
1972	25	7.50	87.17	715.4	4.07	10.13
1975	35	3.00	43.74	801.9	2.61	10.08
		1975 FEDERAL TEST PROCEDURE WEIGHTING FACTORS				
1972	25	6.91	76.79	693.7	4.11	10.61
1975	35	2.27	33.24	775.7	2.52	10.62

RESULTS IN GRAMS PER MILE

TABLE 13

SUMMARY RESULTS OF HIGH SPEED DRIVING CYCLE

WASHINGTON, D.C.

VEHICLE YEAR	NUMBER TESTED	HC	CO	CO2	NOXC	FUEL ECONOMY (MPG)
		1972 FEDERAL TEST PROCEDURE WEIGHTING FACTORS				
1972	25	4.62	30.51	468.8	5.51	16.70
1975	35	.98	13.24	514.3	3.30	16.49
		1975 FEDERAL TEST PROCEDURE WEIGHTING FACTORS				
1972	25	4.10	26.56	455.9	5.47	17.19
1975	35	.78	10.18	497.9	3.26	17.19

RESULTS IN GRAMS PER MILE

TABLE 14

SUMMARY OF LIGHT HYDROCARBON
AND ALIPHATIC ALDEHYDE EMISSIONS

WASHINGTON, D.C.

VEHICLE YEAR	NUMBER	MAKE	METHANE (CH4)	ETHANE (C2H6)	PROPANE (C3H8)	BENZENE (C6H6)	ACETYLENE (C2H2)	ALIPHATIC ALDEHYDES (R-CHO)
			1972 FEDERAL TEST PROCEDURE WEIGHTING FACTORS					
1975	35	CARS	.369	.253	.000	.287	.329	.288
1975	10	TRUCKS	.290	.109	.000	1.178	.280	.217
			1975 FEDERAL TEST PROCEDURE WEIGHTING FACTORS					
1975	35	CARS	.298	.254	.000	.375	.156	.345
1975	10	TRUCKS	.219	.092	.000	1.013	.230	.209

RESULTS IN GRAMS PER MILE

APPENDIX A

LISTING OF VEHICLE AND TEST PARAMETERS

COLUMN HEADING	DESCRIPTION	NUMBER OF DIGITS
VEH:	Vehicle Number	3
RUN:	Run Number	4
DATE:	Date of Test (Month, Day, Year)	6
YR:	Model Year	2
MAKE:	Vehicle Make	4
MODL:	Vehicle Model	4
C:	Number of Cylinders	1
CID:	Engine Displacement in Cubic Inches	3
V:	Number of Carburetor Venturis (0: fuel injection)	1
T:	Type of Transmission (1: automatic, 3: 3-speed manual, 4: 4-speed manual)	1
A:	Air Conditioning? (1: yes, 2: no)	1
FT:	Fuel tank capacity in gallons	2
IRPM:	Idle RPM, Actual	4
IRPMS:	Idle RPM, Specs.	4
P:	PCV System Operational? (1: yes, 2: no)	
DW:	Ignition Point Dwell in Degrees, Actual (99: electronic ignition)	2
DWS:	Ignition Point Dwell in Degrees, Specs. (99: electronic ignition)	2
IGN:	Ignition Timing in Degrees, Actual (+ or blank indicates before top dead center; - indicates after top dead center)	3
IGNS:	Ignition Timing in Degrees, Specs. (+ or blank indicates before top dead center; - indicates after top dead center)	3
INRT:	Dynamometer Inertia Weight Setting	4
RLHP:	Road Load Horsepower Setting	4
L:	Was 10% RLHP added to simulate air-conditioner? (1: yes; 2: no)	1
DB:	Dry-Bulb Temperature (°F.)	2
WB:	Wet-Bulb Temperature (°F.)	2
BAROM:	Barometric Pressure (inches Hg)	5

APPENDIX A (CONT'D)

COLUMN HEADING	DESCRIPTION	NUMBER OF DIGITS
TESTS:	Additional tests performed on this vehicle: 1. Highway Fuel Economy 2. Modal Emissions 3. Clayton Key Mode and Replicate 4. Low Speed Cycle 5. High Speed Cycle 6. Light HC and RCHO	6

APPENDIX A

LISTING OF VEHICLE AND TEST PARAMETERS

VEH	RUN	DATE	YR	MAKE	MODL	C	CID	V	T	A	FT	IRPM	IRPMS	P	DW	DWS	IGN	IGNS	INRT	RLHP	L	DB	WB	BAROM	TESTS
2076	57	111775	72	AMC	HORN	6	258	1	1	2	16	775	600	1	31	32	+07	+03	2750	9.9	2	75	66	30.07	4,5,
2077	9	092675	72	BUIC	ELEC	8	455	4	1	1	25	650	700	1	35	30	+12	+04	5000	14.7	1	76	68	29.88	4,5,
2078	16	093075	72	CADI	DEVI	8	472	4	1	1	27	500	600	1	31	30	+10	+08	5000	14.7	1	77	64	30.05	4,5,
2079	13	093075	72	CHEV	VEGA	4	140	2	4	1	11	900	800	1	31	32	+10	+08	2500	9.4	2	79	56	29.92	4,5,
2080	38	102275	72	CHEV	CHEV	8	350	2	1	1	18	580	600	1	28	30	+06	+06	3500	12.3	1	79	69	29.65	4,5,
2081	17	100175	72	CHEV	CONC	8	350	2	1	1	22	560	600	1	30	30	+08	+06	4000	13.2	1	72	69	29.98	4,5,
2082	23	100975	72	CHEV	NOVA	8	307	2	1	2	16	700	600	1	28	30	+09	+08	3500	11.2	2	72	64	29.95	4,5,
2083	29	101475	72	CHEV	IMPA	8	350	2	1	1	23	550	600	1	32	30	+09	+06	4500	14.0	1	81	67	29.57	4,5,
2084	30	101575	72	CHEV	CAPR	8	400	2	1	1	23	875	600	1	27	30	+10	+06	4500	14.0	1	82	68	29.89	4,5,
2085	22	100875	72	DODG	CORO	8	318	2	1	1	21	850	750	1	37	32	+08	000	3500	12.3	1	83	71	29.88	4,5,
2086	33	102375	72	FORD	PINT	4	122	2	2	1	11	750	650	1	48	38	+05	+06	2500	9.4	2	78	64	30.10	4,5,
2087	27	101475	72	FORD	TORO	8	351	2	1	1	23	800	625	1	28	28	+07	+06	3500	12.3	1	85	67	28.89	4,5,
2088	34	102075	72	FORD	MAVE	6	200	1	1	2	15	580	600	1	30	37	+03	+06	2750	9.9	2	75	58	29.80	4,5,
2089	37	102275	72	FORD	LTD	8	351	2	1	1	22	750	600	1	30	28	+02	+06	4500	14.0	1	78	64	29.80	4,5,
2090	31	101675	72	FORD	STAW	8	400	2	1	1	22	750	625	1	32	28	+09	+08	4500	14.0	1	78	64	29.85	4,5,
2091	96	011376	72	MERC	MARQ	8	429	4	1	1	22	375	600	1	31	28	+07	+10	4500	14.0	1	74	48	29.28	4,5,
2092	12	092675	72	OLDS	DELT	8	350	2	1	1	24	725	650	1	27	30	+10	+08	4500	14.0	1	76	67	29.84	4,5,
2093	71	120375	72	PLYM	DUST	6	225	1	1	2	16	790	750	1	34	44	-01	000	3000	11.2	1	76	52	29.71	4,5,
2094	32	101675	72	PLYM	SUBU	8	360	2	1	1	23	725	750	1	38	30	+02	000	4500	14.0	1	76	61	29.85	4,5,
2095	50	111075	72	PONT	CATA	8	400	2	1	2	25	625	625	1	27	30	+13	+10	4500	14.0	1	79	69	29.76	4,5,
2096	58	111775	72	PONT	LEMA	8	350	2	1	2	20	550	625	1	21	30	+09	+10	3500	11.2	2	74	67	30.07	4,5,
2097	35	102275	72	DATS	510	4	097	2	2	2	12	600	700	1	43	52	+10	+07	2250	8.8	2	76	60	29.68	4,5,
2098	25	101075	72	TOYO	CORL	4	097	2	4	2	12	700	750	1	56	52	+15	+05	2500	9.4	2	75	64	29.97	4,5,
2099	36	102275	72	VOLK	SUPE	4	097	1	2	2	10	750	850	3	50	47	-03	-05	2250	8.8	2	77	60	29.69	4,5,
2100	85	121675	72	VOLK	SUPE	4	097	1	4	2	10	650	850	1	45	46	-04	-05	2250	8.8	2	70	50	29.30	4,5,
4046	24	100975	74	AMER	MATA	8	304	2	1	1	20	640	700	1	30	30	+02	+05	3500	12.3	1	69	55	29.88	
4047	83	121175	74	BUIC	LIMI	8	455	4	1	1	26	610	650	1	30	30	+06	+04	5000	14.7	1	74	52	29.34	
4048	3	092475	74	BUIC	REGA	8	350	2	1	1	22	600	650	1	25	30	+09	+04	4000	12.0	2	74	65	29.82	
4049	11	092675	74	CHEV	VEGA	4	140	1	3	2	16	525	700	1	34	32	+11	+10	2750	9.9	2	76	67	29.84	
4050	7	092575	74	CHEV	CAME	8	350	2	1	1	21	750	800	1	30	30	+06	+08	4000	13.2	1	73	65	29.94	
4051	51	111275	74	CHEV	NOVA	6	250	1	1	2	21	600	600	1	34	33	+05	+06	3000	10.3	2	72	65	29.48	
4052	6	092575	74	CHEV	MALI	8	350	2	1	1	21	450	550	1	29	30	+08	+08	4000	13.2	1	73	66	29.96	
4053	53	111375	74	CHEV	IMPA	8	350	4	1	1	26	550	600	1	23	30	+08	+08	4500	14.0	1	70	61	29.50	
4054	79	120975	74	CHEV	CAPR	8	400	2	1	1	26	520	500	1	30	30	+07	+08	4500	12.7	2	78	58	28.86	
4055	51	111075	74	DODG	MONA	8	360	2	1	1	25	700	850	1	99	99	+05	+05	4500	14.0	1	75	63	29.95	
4056	18	100375	74	DODG	DART	6	225	1	1	1	16	800	750	1	99	99	000	000	3000	10.3	2	69	53	30.35	
4057	5	092575	74	FORD	PINT	4	122	2	4	2	13	700	750	1	44	39	+07	+06	2500	9.4	2	74	66	29.95	
4058	54	111375	74	FORD	TORO	8	302	2	1	1	15	650	575	1	28	28	+04	+06	3500	12.3	1	72	65	29.52	
4059	1	092475	74	FORD	MAVE	6	250	1	1	1	15	500	600	1	25	36	+06	+06	3000	10.3	2	72	64	29.80	
4060	61	112075	74	FORD	TORI	8	351	2	1	1	21	570	650	1	34	26	+18	+14	4500	14.0	1	76	58	29.63	
4061	87	121975	74	FORD	COUN	8	400	2	1	1	21	700	625	1	99	99	+12	+12	5000	14.7	1	75	49	29.53	
4062	20	100475	74	LINC	CONT	8	460	4	1	1	27	625	600	1	99	99	+14	+14	5500	15.3	1	74	59	30.27	
4063	95	010976	74	MERC	COUG	8	351	2	1	1	27	550	600	1	28	28	+14	+06	4500	14.0	1	77	49	29.37	
4064	21	101075	74	OLDS	CUTL	8	350	4	1	1	22	550	550	1	24	30	+12	+12	4000	13.2	1	74	63	30.09	
4065	25	100975	74	OLDS	DELT	8	350	4	1	1	26	525	600	1	29	30	+12	+12	5000	14.7	1	70	64	29.94	
4066	4	092475	74	OLDS	REGE	8	455	4	1	1	26	550	650	1	99	99	+08	+08	5000	14.7	1	74	65	29.83	
4067	2	092475	74	PLYM	DUST	8	318	2	1	1	16	700	750	1	99	99	000	000	3000	11.3	1	73	66	29.80	
4068	15	093075	74	PLYM	VALI	6	225	1	3	1	16	740	800	1	99	99	000	000	3500	11.2	2	75	64	30.08	
4069	8	092675	74	PONT	GRNA	8	400	2	1	1	25	750	720	1	30	30	+12	+12	4500	14.0	1	74	67	29.90	
4070	10	092675	74	PONT	LEMA	8	350	2	1	1	22	700	650	1	29	30	+10	+12	4500	14.0	1	75	67	29.87	
4071	14	092975	74	DATS	710	4	110	2	4	1	13	675	800	1	40	35	+13	+12	2500	9.4	2	76	62	30.10	

LISTING OF VEHICLE AND TEST PARAMETERS

VEH	RUN	DATE	YR	MAKE	MODL	C	CID	V	T	A	FT	IRPM	IRPMS	P	DW	DWS	IGN	IGNS	INRT	RLHP	L	DB	WB	BAROM	TESTS
4072	19	100475	74	MAZD	RX2	2	070	4	4	2	17	875	900	1	54	58	-15	-15	2750	9.9	2	79	65	30.28	
4073	47	110575	74	TOYO	CORL	4	097	2	2	1	12	880	750	1	99	99	+10	+05	2000	8.3	2	71	62	30.02	
4074	39	102375	74	VOLK	SUPE	4	097	1	2	2	11	840	850	1	44	47	000	-05	2250	9.7	1	76	63	30.18	
4075	41	102875	74	VOLK	SUPE	4	097	1	2	2	11	800	800	1	50	44	+07	+07	2250	8.8	2	77	64	30.08	
5011	43	110375	75	AMC	HORN	6	258	1	1	2	17	525	550	1	99	99	+03	+03	3500	11.2	2	77	64	30.07	1,2,3,4,5,6
5012	92	010576	75	BUIC	SKYL	6	231	2	1	1	21	500	500	1	99	99	+12	+12	4000	13.2	1	78	50	29.57	1,2,3,4,5,6
5013	78	121075	75	BUIC	ELEC	8	455	4	1	1	26	600	800	1	99	99	+12	+12	5000	14.7	1	74	55	29.04	1,2,3,4,5,6
5014	81	121075	75	BUIC	ELEC	8	455	4	1	1	26	900	600	1	99	99	+12	+12	5000	14.7	1	74	51	28.96	1,2,3,4,5,6
5015	40	102875	75	CADI	DEVI	8	500	4	1	1	28	625	600	1	99	99	+06	+06	5500	15.3	1	75	63	30.07	1,2,3,4,5,6
5016	44	110475	75	CHEV	VEGA	4	140	2	1	2	16	650	750	1	99	99	+12	+12	2750	9.9	2	77	66	30.00	1,2,3,4,5,6
5017	80	120975	75	CHEV	CAMA	6	250	1	1	1	21	900	600	1	99	99	+10	+10	3500	11.2	2	77	56	28.89	1,2,3,4,5,6
5018	62	112475	75	CHEV	MONT	8	350	2	1	1	22	600	600	1	99	99	+07	+06	4000	13.2	1	68	53	29.93	1,2,3,4,5,6
5019	49	020976	75	CHEV	IMPA	8	350	2	1	1	21	620	600	1	99	99	+06	+06	4500	12.7	2	74	50	29.26	1,2,3,4,5,
5020	46	110575	75	CHEV	IMPA	8	350	2	1	1	22	650	600	1	99	99	+06	+06	4500	14.0	1	76	63	30.06	1,2,3,4,5,6
5021	66	112975	75	CHEV	CAPR	8	400	4	1	1	22	525	600	1	99	99	+07	+06	5500	15.3	1	74	50	30.17	1,2,3,4,5,6
5022	55	111475	75	CHRY	NEWY	8	440	4	1	1	27	700	750	1	99	99	+08	+08	5000	14.7	1	71	63	29.62	1,2,3,4,5,6
5023	76	120875	75	DODG	CHAR	8	360	2	1	1	26	700	750	1	99	99	+06	+06	4000	13.2	1	73	53	29.25	1,2,3,4,5,6
5024	48	110675	75	DODG	DART	6	225	1	1	2	16	760	750	1	99	99	-01	000	3500	11.2	2	71	60	30.13	1,2,3,4,5,6
5025	68	120275	75	FORD	MUST	4	140	2	1	1	13	625	550	1	99	99	+12	+06	3000	10.3	2	76	52	30.46	1,2,3,4,5,6
5026	93	010776	75	FORD	TORI	8	351	2	1	1	27	500	650	1	99	99	+05	+06	4500	14.0	1	76	51	29.27	1,2,3,4,5,6
5027	82	120975	75	FORD	MAVE	6	250	1	1	2	16	650	500	1	99	99	+06	+06	3000	10.3	2	74	51	29.26	1,2,3,4,5,6
5028	67	112875	75	FORD	TORI	8	351	2	1	1	27	625	500	1	99	99	+04	+06	4500	14.0	1	74	53	30.22	1,2,3,4,5,6
5029	45	110475	75	FORD	LTD	8	400	2	1	1	24	500	500	1	99	99	+06	+06	4500	14.0	1	76	61	30.06	1,2,3,4,5,6
5030	70	120275	75	MERC	MARQ	8	460	4	1	1	25	350	650	1	99	99	+12	+14	5000	14.7	1	72	51	30.06	1,2,3,4,5,6
5031	94	010676	75	MERC	COUG	8	351	2	1	1	27	700	650	1	99	99	+05	+06	4000	13.2	1	78	51	29.37	1,2,3,4,5,6
5032	65	112675	75	OLDS	DELT	8	350	4	1	1	26	660	650	1	99	99	+19	+20	5000	14.7	1	74	67	30.20	1,2,3,4,5,6
5033	63	112575	75	OLDS	CUTL	8	350	4	1	1	26	525	550	2	99	99	+18	+20	4000	13.2	1	69	50	29.91	1,2,3,4,5,6
5034	59	111875	75	OLDS	CUST	8	455	4	1	1	22	650	650	1	99	99	+15	+16	5500	15.3	1	76	68	30.18	1,2,3,4,5,6
5035	56	111475	75	PLYM	FURY	8	318	2	1	1	26	800	750	1	99	99	+02	+02	4000	13.2	1	73	71	29.70	1,2,3,4,5,6
5036	64	112675	75	PLYM	VALI	6	225	1	3	2	16	700	800	1	99	99	000	000	3500	11.2	2	76	51	30.26	1,2,3,4,5,6
5037	91	123175	75	PONT	GRAN	8	400	4	1	1	25	700	650	1	99	99	+16	+16	4500	14.0	1	75	55	29.05	1,2,3,4,5,6
5038	74	021276	75	PONT	LEMA	8	350	2	1	1	22	575	600	1	99	99	+14	+16	4000	12.0	2	80	54	29.42	1,2,3,4,5,
5039	102	011976	75	PONT	GRAN	8	400	2	1	1	26	700	650	1	99	99	+13	+16	5000	14.7	1	74	49	29.37	1,2,3,4,5,6
5040	72	120575	76	MERC	CAPR	4	140	2	4	2	12	750	550	1	99	99	+10	+10	2750	9.9	2	74	53	29.50	1,2,3,4,5,6
5041	42	102975	75	DATS	B210	4	085	2	4	2	12	950	700	1	50	52	+10	+10	2250	8.8	2	77	63	30.02	1,2,3,4,5,6
5042	60	111975	75	HOND	CIVI	4	091	3	4	2	10	500	850	1	56	52	+02	000	2000	8.3	2	75	69	30.11	1,2,3,4,5,6
5043	75	021376	75	TOYO	CORO	4	097	2	4	2	13	800	850	1	99	99	+12	+17	2500	10.3	1	76	55	29.20	1,2,3,4,5,
5044	98	011476	75	VOLK	DASH	4	090	2	4	1	12	950	925	1	99	99	-02	-03	2250	8.8	2	73	49	29.37	1,2,3,4,5,6
5045	77	120875	75	VOLK	RABB	4	090	1	2	2	16	975	925	1	56	47	-03	-03	2000	9.1	1	78	56	29.08	1,2,3,4,5,6
6001	99	011576	75	CHEV	CUST	6	250	1	3	2	22	550	550	1	99	99	+12	+10	4000	12.0	2	76	50	29.38	1,2,3, 6
6002	88	121975	75	CHEV	CUST	8	350	2	1	2	18	680	650	1	99	99	+07	+06	4000	12.0	1	76	49	29.38	1,2,3, 6
6003	97	012176	75	CHEV	CUST	8	350	2	1	1	21	650	700	1	99	99	+06	+02	4000	12.0	2	74	49	29.01	1,2,3, 6
6004	100	011576	75	CHEV	SCOT	8	350	2	1	2	21	600	600	1	99	99	+06	+06	4000	12.0	2	76	49	29.22	1,2,3, 6
6005	73	120575	75	DODG	D100	8	318	2	1	1	24	625	700	1	99	99	+02	+02	4500	12.7	2	78	56	29.41	1,2,3, 6
6006	86	121875	75	FORD	ECON	6	300	2	3	2	18	780	700	1	99	99	+06	+12	4000	12.0	2	80	50	29.20	1,2,3, 6
6007	83	121175	75	FORD	CUST	8	302	2	1	2	18	900	550	1	99	99	+10	+12	4000	12.0	2	76	50	29.26	1,2,3, 6
6008	90	122375	75	FORD	CLUB	8	351	2	1	2	18	625	650	1	99	99	+08	+14	5000	13.4	2	78	51	29.23	1,2,3, 6
6009	89	122275	75	FORD	ECON	8	351	2	1	1	18	625	650	1	99	99	+12	+14	4500	14.0	1	75	50	29.07	1,2,3, 6
6010	101	011976	75	GMC	VAND	8	350	4	1	2	18	600	600	1	30	30	+04	+04	4000	12.0	2	72	49	29.62	1,2,3, 6

TESTS: ADDITIONAL TESTS PERFORMED ON THIS VEHICLE

1. HIGHWAY FUEL ECONOMY
2: MODAL EMISSIONS
3. CLAYTON KEY MODE AND REPLICATE
4. LOW SPEED CYCLE
5. HIGH SPEED CYCLE
6. LIGHT HC AND RCHO

APPENDIX B

LISTING OF TEST VEHICLE USE AND MAINTENANCE DATA

COLUMN HEADING	DESCRIPTION	NUMBER OF DIGITS
VEH:	Vehicle Number	3
YR:	Model Year	2
MAKE:	Vehicle Make	4
MODL:	Vehicle Model	4
VIN:	Vehicle Identification Number	13
ODOM:	Odometer Reading	6
PRDATE:	Purchase Date of Vehicle (1 = 0-3 mos.; 2 = 3-12 mos.; 3 = 1-2 yrs.; 4 = over 2 yrs.)	1
N:	New or Used? (1: New; 2: Used)	1
VMT:	Yearly Vehicle Miles Traveled (1 = 0-5,000; 2 = 5,001-10,000; 3 = 10,001-15,000; 4 = 15,001-20,000; 5 = 20,001-30,000; 6 = over 30,000)	5
C:	Downtown Driving (1: All; 2: Most; 3: Some; 4: None)	1
S:	Suburban Driving (1: All; 2: Most; 3: Some; 4: None)	1
F:	Expressway Driving (1: All; 2: Most; 3: Some; 4: None)	1
W:	Driving To and From Work (1: All; 2: Most; 3: Some; 4: None)	1
G:	Shopping (1: All; 2: Most; 3: Some; 4: None)	1
B:	Business (not to and from work) (1: All; 2: Most; 3: Some; 4: None)	1
V:	Travel, Vacations, etc. (1: All; 2: Most; 3: Some; 4: None)	1
MFRREC:	Vehicles Maintained to Manufacturer's Recommendations (1: Yes; 2: No; 3: Don't Know)	1
LOC:	Date of Last Cil Change (Month, Year or 9999: Don't Know)	4
LTU:	Last Tune Up (Month, Year)	4
W:	Who Performed Tune Up? (1: franchised dealer; 2: independent garage; 3: service station; 4: owner or friend; 9: don't know)	1
MOD:	Al[illegible]ered Engine and/or Exhaust System Components	1

APPENDIX B (CONT'D)

COLUMN HEADING	DESCRIPTION	NUMBER OF DIGITS
OPER:	Vehicle operated 50 percent of the time on unpaved roads, in competitive events, or in hauling or transporting loads heavier than for which it was designed. (1: Yes; 2: No; 3: Don't Know)	1
D:	Has vehicle ever had major damage to: a: cooling system; b: engine; c: fuel tank; d: exhaust; e: no damage. (1: Yes; 2: No; 3: Don't Know)	5
LEAD:	If unleaded fuel is required, has vehicle been operated on leaded fuel? (1: not required; 2: never; 3: once or twice; 4: occasionally; 5: regularly; 6: don't know)	1
H2S:	Have you or others noticed a hydrogen sulfide (rotten eggs) odor in this vehicle's exhaust? (1: never; 2; rarely; 3: occasionally; 4: regularly; 5: don't know)	1

LISTING OF VEHICLE USE AND MAINTENANCE DATA

VEH	YR	MAKE	MODL	VIN	ODOM	PRDATE	N	VMT	C	S	F	W	G	B	V	MFRREC	LOC	LTU	W	MOD	OPER	D	LEAD	H2S
2076	72	AMC	HORN	A2E067A732077	52813	4	1	4	3	3	3	3	3	4	3	1	1	1	4	2	2	22221	1	1
2077	72	BUIC	ELEC	4V39V2Y186495	32736	4	1	3	3	3	3	3	3	4	4	2	2	1	2	2	2	22221	1	1
2078	72	CADI	DEVI	6D47R20163240	34929	2	2	3	3	2	3	3	3	4	3	3	1	1	1	2	2	22221	1	1
2079	72	CHEV	VEGA	1V77B2V298308	25689	3	2	2	3	3	2	2	3	4	3	1	1	3	1	2	2	22221	1	1
2080	72	CHEV	CHEV	1D37D2Y103446	37562	3	2	3	3	2	3	3	2	4	3	1	1	1	4	2	2	22221	1	1
2081	72	CHEV	CONC	1H36H2B640630	34925	4	2	3	3	2	3	4	3	4	2	1	1	1	4	2	2	22221	1	1
2082	72	CHEV	NOVA	1X27F2W323953	27569	4	1	2	3	3	2	2	3	4	3	1	1	3	2	2	2	22221	1	1
2083	72	CHEV	IMPA	1M39H2Y116852	63356	3	2	3	4	1	4	4	2	4	3	1	1	1	4	2	2	22221	1	1
2084	72	CHEV	CAPR	1N69R2Y138351	16988	4	1	2	4	2	3	4	2	4	3	1	1	1	2	2	2	22221	1	1
2085	72	DODG	CORO	WH41G2A129139	46015	4	1	2	4	2	3	4	3	4	2	1	1	1	2	2	2	22221	1	1
2086	72	FORD	PINT	2T10X215469	14955	4	1	1	3	2	3	3	2	4	4	1	1	4	5	2	2	22221	1	1
2087	72	FORD	TORO	2A30H340381	34581	4	1	2	4	1	4	4	2	4	3	1	1	3	1	2	2	.22221	1	1
2088	72	FORD	MAVE	2X91T240399	20672	4	1	2	4	2	3	2	3	4	4	1	1	3	4	2	2	22221	1	1
2089	72	FORD	LTD	2E63H157273	22839	4	1	2	4	2	3	4	2	4	3	1	1	1	2	2	2	22221	1	1
2090	72	FORD	STAW	2E76S227621	35768	4	1	2	4	1	4	4	2	4	3	1	1	1	1	2	2	22221	1	1
2091	72	MERC	MARQ	2V66N511299	39627	3	2	3	4	1	4	3	3	4	3	1	1	1	2	2	2	22221	1	1
2092	72	OLDS	DELT	3L57H2E129196	83425	1	2	4	4	2	3	2	3	3	3	1	1	1	4	2	2	22221	1	5
2093	72	PLYM	DUST	VL29C2B295538	31754	4	1	3	4	3	2	2	3	4	4	1	1	1	4	2	2	22221	1	1
2094	72	PLYM	SUBU	PH45K2D328350	42146	4	1	3	3	3	3	2	3	4	3	1	1	2	4	2	2	22221	1	1
2095	72	PONT	CATA	2L57R22303547	53986	3	1	4	3	2	3	2	3	4	3	3	2	2	2	2	2	22221	1	1
2096	72	PONT	LEMA	2D67M2P115083	57581	2	2	2	2	3	3	3	3	3	3	1	1	2	2	2	2	22221	1	1
2097	72	DATS	510	PL510363234	45889	4	1	4	2	4	3	4	2	4	3	1	1	1	1	2	2	22212	1	1
2098	72	TOYO	CORL	TE21077183	45989	4	1	4	3	3	2	2	3	3	4	1	1	1	1	2	2	22221	1	1
2099	72	VOLK	SUPE	1122872673	23778	4	1	2	2	3	4	2	3	4	4	1	2	2	2	2	2	22221	1	1
2100	72	VOLK	SUPE	1122848088	53924	3	2	4	3	4	2	2	3	4	3	1	1	1	4	2	2	22221	1	1
4046	74	AMER	MATA	A4A157H492901	16590	3	1	3	4	2	3	4	2	4	3	1	1	1	2	2	2	22221	1	1
4047	74	BUIC	LIMI	4X39T4H424183	15030	3	1	2	3	3	2	3	3	4	2	1	1	1	1	2	2	22221	2	1
4048	74	BUIC	REGA	4J57H4G132931	34375	3	1	4	3	3	3	3	3	2	3	1	1	2	1	2	2	22221	1	1
4049	74	CHEV	VEGA	1V11A42131245	8460	3	2	2	3	2	3	3	3	4	3	1	2	3	2	2	2	22221	1	1
4050	74	CHEV	CAME	1S87H4N238198	5324	2	1	2	4	2	3	2	3	4	3	1	1	2	1	2	2	22221	1	1
4051	74	CHEV	NOVA	1X27D4W232648	17866	3	1	3	3	3	2	2	3	4	4	1	1	1	4	2	2	22221	3	1
4052	74	CHEV	MALI	1D37H4B609275	12759	3	1	3	4	2	3	2	3	4	3	1	1	3	1	2	2	22221	1	1
4053	74	CHEV	IMPA	1L57H45226717	18186	3	1	4	4	2	3	2	3	4	3	1	1	1	1	2	2	22221	1	1
4054	74	CHEV	CAPR	1N39R4T231691	13288	3	1	3	3	3	4	2	3	4	4	1	1	1	1	2	2	22221	1	1
4055	74	DODG	MONA	DH41K4D201685	12113	3	1	2	3	3	3	2	3	4	3	1	1	1	1	2	2	22222	1	1
4056	74	DODG	DART	LL29C4B124519	30849	3	1	4	3	2	3	2	3	3	3	1	1	1	2	2	2	22221	1	1
4057	74	FORD	PINT	4T11X194105	18153	3	1	3	4	2	3	2	3	4	3	1	1	2	2	2	2	22221	1	1
4058	74	FORD	TORO	4H25F227184	42799	3	1	6	3	3	3	4	4	1	4	1	1	1	2	2	2	22221	1	1
4059	74	FORD	MAVE	4X93L215266	13301	3	1	3	4	2	3	3	3	4	4	1	1	1	2	2	2	22221	1	1
4060.	74	FORD	TORI	4B40H128640	23424	3	1	3	3	3	3	2	3	4	3	1	1	1	1	2	2	22221	2	1
4061	74	FORD	COUN	4E765108068	40684	3	2	4	3	3	2	4	3	3	2	2	1	1	1	2	2	21222	1	1
4062	74	LINC	CONT	4Y89A882829	24335	3	1	3	4	2	3	2	3	3	4	1	1	1	1	2	2	22221	1	1
4063	74	MERC	COUG	4A93H541321	24398	3	1	3	4	2	3	3	2	3	3	1	1	1	2	2	2	22221	1	1
4064	74	OLDS	CUTL	3J29K4M176152	32740	3	1	5	4	3	3	3	3	2	3	1	1	1	4	1	2	22221	1	1
4065	74	OLDS	DELT	3N39K4E127828	30707	3	1	4	4	2	3	3	3	2	3	1	1	1	2	2	2	22221	1	1
4066	74	OLDS	REGE	3X39T4E118500	13798	3	1	1	4	1	4	3	2	4	3	1	1	1	1	2	2	22221	1	1
4067	74	PLYM	DUST	VL29G4B374852	7875	2	1	2	4	1	4	2	3	4	4	1	1	2	1	2	2	22221	1	1
4068	74	PLYM	VALI	VL29C4B429014	17171	3	1	3	4	1	4	2	3	4	3	1	1	2	2	2	2	22221	1	1
4069	74	PONT	GRNA	H37P4172416	12674	3	1	2	2	3	3	3	3	4	3	1	1	1	1	2	2	22221	1	1
4C70	74	PONT	LEMA	2D37M41520286	18114	3	1	4	4	2	3	4	3	4	2	1	2	2	2	2	2	22221	4	1
4071	74	DATS	710	JHL710-004630	22334	3	2	3	3	3	3	3	3	2	3	1	1	1	4	2	2	22221	1	1

APPENDIX B

LISTING OF VEHICLE USE AND MAINTENANCE DATA

VEH	YR	MAKE	MODL	VIN	ODOM	PRDATE	N	VMT	C	S	F	W	G	B	V	MFRREC	LOC	LTU	W	MOD	OPER	D	LEAD	H2S
4072	74	MAZD	RX2	S122A-217460	10364	3	1	2	2	3	3	3	3	3	4	1	1	1	1	2	2	22221	1	1
4073	74	TOYO	CORL	TE21667871	13739	3	1	2	4	1	4	4	1	4	4	1	1	1	1	2	2	22221	1	1
4074	74	VOLK	SUPE	1342443596	22044	3	1	3	3	2	4	2	2	3	3	1	1	1	1	2	2	22221	1	1
4075	74	VOLK	SUPE	1342423069	20224	3	1	3	3	2	4	2	3	4	4	1	1	1	1	2	2	22221	2	1
5011	75	AMC	HORN	A5A037A138315	12259	2	1	3	3	2	3	2	3	3	3	1	1	1	1	2	2	22221	2	1
5012	75	BUIC	SKYL	4W27C5K128460	8833	2	1	3	3	3	3	2	3	4	4	1	4	4	5	3	2	22221	2	1
5013	75	BUIC	ELEC	4X37T54553332	8881	2	1	4	3	2	3	4	4	2	3	1	1	1	1	2	2	22221	2	4
5014	75	BUIC	ELEC	4VB7T5H429865	18200	3	1	2	4	4	1	1	4	4	4	1	2	1	1	2	2	22221	2	1
5015	75	CADI	DEVI	6D49S50114095	13833	2	1	2	3	3	2	2	3	3	3	1	1	1	1	2	2	22221	2	1
5016	75	CHEV	VEGA	1V77B5U129426	22646	2	1	4	4	3	2	2	3	4	3	1	1	1	1	2	2	22221	2	4
5017	75	CHEV	CAMA	1087D5N572270	18407	2	1	3	4	2	3	2	3	3	3	1	1	1	4	2	2	22221	2	1
5018	75	CHEV	MONT	1H57H3B490067	12517	2	1	3	4	1	4	4	4	1	4	1	1	1	1	2	2	22221	2	1
5019	75	CHEV	IMPA	1L69H5Y119743	4770	3	1	3	3	3	3	4	4	1	4	[illegible]	1	1	1	2	2	22221	6	1
5020	75	CHEV	IMPA	1L47H5Y152538	9420	2	1	2	3	2	3	2	3	4	3	1	1	4	5	2	2	22221	2	1
5021	75	CHEV	CAPR	1N45U5Y130127	18195	3	1	4	3	3	3	3	3	3	3	1	1	3	1	2	2	22221	2	1
5022	75	CHRY	NEWY	CS23T5C136051	4285	2	1	2	3	2	4	3	3	3	3	1	1	1	1	2	2	22221	2	4
5023	75	DODG	CHAR	XS22K5R108262	13753	3	1	3	4	1	4	2	4	4	3	1	1	1	1	2	2	22221	2	1
5024	75	DODG	DART	LL29C5B101129	14138	3	1	3	4	3	2	4	2	4	3	1	1	4	5	2	2	22221	2	1
5025	75	FORD	MUST	5F02Y196787	6243	1	1	2	3	3	3	4	4	1	4	1	1	1	1	2	2	22221	2	1
5026	75	FORD	TORI	5A27H134030	12803	2	1	3	4	1	4	1	3	4	3	1	1	1	1	2	2	22221	2	1
5027	75	FORD	MAVE	5K92L137398	17349	2	1	4	4	3	2	2	3	4	4	1	1	2	2	2	1	22221	2	3
5028	75	FORD	TORI	5621H142755	9970	3	1	3	4	1	4	1	4	4	4	2	1	1	1	2	1	22221	2	3
5029	75	FORD	LTD	5B63S106236	2239	2	1	1	3	2	4	4	4	1	4	1	1	1	1	2	2	22221	2	1
5030	75	MERC	MARQ	5Z62A505662	15732	3	1	4	3	3	2	3	3	4	2	1	1	1	1	2	2	22221	2	1
5031	75	MERC	COUG	5A93H548420	7364	2	1	3	4	2	3	2	3	3	3	1	1	2	1	2	2	22221	2	1
5032	75	OLDS	DELT	3N69K5E121954	6490	2	1	2	4	1	4	4	4	1	4	1	1	1	1	2	2	22221	2	1
5033	75	OLDS	CUTL	3J57K5M248506	9558	2	1	4	3	3	2	2	3	3	3	1	1	2	1	2	2	22221	2	1
5034	75	OLDS	CUST	3R45T5X113786	11854	2	1	3	3	2	3	4	2	4	3	1	1	1	1	2	2	22221	2	1
5035	75	PLYM	FURY	RP23G5G104348	12951	2	1	3	2	3	3	3	2	4	3	1	1	1	1	2	2	22221	2	3
5036	75	PLYM	VALI	VH41C5R227079	8746	2	1	2	3	2	3	4	3	2	3	3	1	1	1	2	2	22221	2	4
5037	75	PONT	GRAN	2K57S5A122656	8062	2	1	2	3	2	3	3	3	3	3	3	1	1	1	2	2	22221	2	1
5038	75	PONT	LEMA	2G37M5A116105	15063	2	1	3	3	3	3	3	3	4	2	1	1	1	1	2	2	22221	2	4
5039	75	PONT	GRAN	2H37R5P216008	12545	2	1	4	4	2	3	2	3	4	3	1	1	1	1	2	2	22221	2	1
5040	76	MERC	CAPR	GAECRC05540	4512	2	1	2	3	2	3	2	3	3	3	1	1	1	1	2	2	22221	2	1
5041	75	DATS	B210	HLB210100393	7552	1	1	1	3	3	2	2	3	4	4	1	1	1	1	2	2	22221	3	1
5042	75	HOND	CIVI	SG-C10046674	12780	2	1	3	3	2	3	2	3	4	3	1	1	2	1	2	2	22221	1	1
5043	75	TOYO	CORO	TE31011164	11093	2	2	3	4	4	1	1	4	4	4	1	1	1	4	2	2	22221	2	1
5044	75	VOLK	DASH	3252093283	3286	2	1	2	4	2	4	2	4	4	3	1	1	1	1	2	2	22221	2	1
5045	75	VOLK	RABB	1753148246	10727	2	2	3	3	2	3	1	4	4	4	1	1	1	2	2	2	22221	2	3
6001	75	CHEV	CUST	CCQ145B155625	3284	2	2	2	4	1	4	1	4	4	4	3	2	2	1	2	2	22221	2	1
6002	75	CHEV	CUST	CCV145B144991	2146	1	1	2	4	1	4	1	4	4	4	1	1	1	4	3	2	22221	5	3
6003	75	CHEV	CUST	CCV145B102185	17436	2	1	4	3	3	3	3	3	4	3	1	1	1	1	2	2	22221	2	3
6004	75	CHEV	SCOT	CCV145B152665	640	1	1	2	4	2	3	2	4	3	4	1	1	1	1	2	2	22221	2	1
6005	75	DODG	D100	D14BE5S153938	6071	1	1	5	3	2	3	3	4	2	4	1	1	1	1	2	2	22221	1	1
6006	75	FORD	ECON	E04BHW88662	15366	2	1	5	3	3	3	3	3	3	3	1	1	1	1	2	2	22221	5	1
6007	75	FORD	CUST	E10GNV20919	7735	2	1	2	4	1	4	1	4	4	4	1	1	1	1	2	1	22221	2	1
6008	75	FORD	CLUB	E23HHX43545	3511	2	1	4	2	3	3	4	4	2	3	1	1	1	1	2	2	22221	1	1
6009	75	FORD	ECON	E15HHW95797	18413	2	1	6	4	2	3	3	4	2	4	1	1	1	1	2	2	22221	1	1
6010	75	GMC	VAND	TGY25S4500232	7706	2	1	4	3	3	3	4	4	1	4	1	1	1	1	2	2	22221	6	1

APPENDIX C

LISTING OF FEDERAL TEST PROCEDURE RESULTS
ON INDIVIDUAL VEHICLES

WASHINGTON, D.C.

VEHICLE NUMBER	YEAR	MAKE	MODEL	CID	TEST TYPE	HC	CO	CO2	NOXC	FUEL ECONOMY	LIGHT HYDROCARBONS: METHANE (CH4)	ETHANE (C2H6)	PROPANE (C3H8)	BENZENE (C6H6)	ACETYLENE (C2H2)	ALIPHATIC ALDEHYDES (R-CHO)
2076	72	AMC	HORN	258	COLD TRANS	3.32	34.49	545.7	5.71	14.54						
					COLD STAB	2.77	22.66	527.9	3.32	15.51						
IHC=1,950 PPM/HEXANE					HOT TRANS	2.41	14.95	463.0	5.56	17.97						
ICO(ACT) 3.20 % CO					72 FTP	3.03	28.32	536.5	4.39	15.02						
ICO(SPEC)= 1.50 % CO					75 FTP	2.78	22.99	513.9	4.42	15.88						
OTHER TESTS: HIGH,LOW																
2077	72	BUIC	ELEC	455	COLD TRANS	3.70	37.96	875.0	11.64	9.38						
					COLD STAB	2.32	16.43	797.7	6.76	10.68						
IHC= 65 PPM/HEXANE					HOT TRANS	2.40	9.69	817.1	10.83	10.57						
ICO(ACT) .50 % CO					72 FTP	2.98	26.74	834.7	8.71	10.01						
ICO(SPEC)= NONE % CO					75 FTP	2.63	19.02	818.9	8.88	10.35						
OTHER TESTS: HIGH,LOW																
2078	72	CADI	DEVI	472	COLD TRANS	3.71	89.07	965.1	4.17	7.94						
					COLD STAB	3.76	83.32	853.1	2.35	8.91						
IHC= 420 PPM/HEXANE					HOT TRANS	3.67	54.78	731.7	3.56	10.70						
ICO(ACT) 5.30 % CO					72 FTP	3.74	86.07	906.7	2.93	8.42						
ICO(SPEC)= NONE % CO					75 FTP	3.72	76.72	843.0	3.05	9.10						
OTHER TESTS: HIGH,LOW																
2079	72	CHEV	VEGA	140	COLD TRANS	3.62	31.43	448.1	4.29	17.44						
					COLD STAB	1.28	16.05	505.6	2.06	16.59						
IHC= 75 PPM/HEXANE					HOT TRANS	2.38	24.56	398.7	3.99	19.96						
ICO(ACT) 1.50 % CO					72 FTP	2.40	23.41	478.1	2.93	16.98						
ICO(SPEC)= NONE % CO					75 FTP	2.06	21.54	464.6	3.04	17.57						
OTHER TESTS: HIGH,LOW																
2080	72	CHEV	CHEV	350	COLD TRANS	5.01	51.79	618.8	5.80	12.39						
					COLD STAB	3.81	43.98	575.9	4.76	13.50						
IHC= 170 PPM/HEXANE					HOT TRANS	3.56	33.66	507.2	5.82	15.54						
ICO(ACT) 1.20 % CO					72 FTP	4.38	47.72	596.4	5.27	12.95						
ICO(SPEC)= NONE % CO					75 FTP	3.99	42.77	566.0	5.26	13.74						
OTHER TESTS: HIGH,LOW																

EXHAUST EMISSIONS REPORTED IN GRAMS PER MILE
FUEL ECONOMY IN MILES PER GALLON

APPENDIX C

LISTING OF FEDERAL TEST PROCEDURE RESULTS ON INDIVIDUAL VEHICLES

WASHINGTON, D.C.

VEHICLE NUMBER	YEAR	MAKE	MODEL	CID	TEST TYPE	HC	CO	CO2	NOXC	FUEL ECONOMY	LIGHT HYDROCARBONS: METHANE (CH4)	ETHANE (C2H6)	PROPANE (C3H8)	BENZENE (C6H6)	ACETYLENE (C2H2)	ALIPHATIC ALDEHYDES (R-CHO)
2081	72	CHEV	CONC	350	COLD TRANS	3.57	61.85	743.3	3.73	10.42						
					COLD STAB	2.31	27.90	760.6	2.26	10.93						
IHC= 75 PPM/HEXANE					HOT TRANS	2.39	21.76	656.2	3.26	12.71						
ICO(ACT) .95 % CO					72 FTP	2.92	44.15	752.4	2.74	10.68						
ICO(SPEC)= NONE % CO					75 FTP	2.59	33.21	728.6	2.83	11.24						
OTHER TESTS: HIGH,LOW																
2082	72	CHEV	NOVA	307	COLD TRANS	5.04	27.46	598.3	6.24	13.50						
					COLD STAB	3.43	16.76	578.3	2.98	14.42						
IHC= 150 PPM/HEXANE					HOT TRANS	3.31	13.03	588.1	5.48	14.34						
ICO(ACT) 1.20 % CO					72 FTP	4.20	21.88	587.9	4.18	13.96						
ICO(SPEC)= NONE % CO					75 FTP	3.72	17.95	585.1	4.33	14.19						
OTHER TESTS: HIGH,LOW																
2083	72	CHEV	IMPA	350	COLD TRANS	6.18	63.38	673.7	6.20	11.19						
					COLD STAB	3.67	45.44	620.5	3.40	12.62						
IHC= 200 PPM/HEXANE					HOT TRANS	3.19	33.20	578.1	5.43	13.86						
ICO(ACT) 4.10 % CO					72 FTP	4.87	54.03	645.9	4.37	11.89						
ICO(SPEC)= NONE % CO					75 FTP	4.05	45.79	619.8	4.53	12.59						
OTHER TESTS: HIGH,LOW																
2084	72	CHEV	CAPR	400	COLD TRANS	3.56	48.29	780.5	4.66	10.23						
					COLD STAB	2.12	20.28	769.9	3.11	10.98						
IHC= 75 PPM/HEXANE					HOT TRANS	2.23	24.66	652.3	6.37	12.71						
ICO(ACT) .85 % CO					72 FTP	2.81	33.69	775.0	4.67	10.60						
ICO(SPEC)= NONE % CO					75 FTP	2.44	27.24	740.0	4.32	11.22						
OTHER TESTS: HIGH,LOW																
2085	72	DODG	CORO	318	COLD TRANS	3.51	26.94	583.6	7.88	13.93						
					COLD STAB	3.16	10.15	541.2	5.64	15.65						
IHC=1,000 PPM/HEXANE					HOT TRANS	3.20	11.30	509.6	8.09	16.51						
ICO(ACT) 1.20 % CO					72 FTP	3.33	18.18	561.5	6.81	14.77						
ICO(SPEC)= .50 % CO					75 FTP	3.24	13.91	541.3	6.77	15.47						
OTHER TESTS: HIGH,LOW																

EXHAUST EMISSIONS REPORTED IN GRAMS PER MILE
FUEL ECONOMY IN MILES PER GALLON

APPENDIX C

LISTING OF FEDERAL TEST PROCEDURE RESULTS ON INDIVIDUAL VEHICLES

WASHINGTON, D.C.

VEHICLE NUMBER	YEAR	MAKE	MODEL	CID	TEST TYPE	HC	CO	CO2	NOXC	FUEL ECONOMY	LIGHT HYDROCARBONS: METHANE (CH4)	ETHANE (C2H6)	PROPANE (C3H8)	BENZENE (C6H6)	ACETYLENE (C2H2)	ALIPHATIC ALDEHYDES (R-CHO)
2086	72	FORD	PINT	122	COLD TRANS	5.46	63.54	353.5	5.37	18.86						
					COLD STAB	5.13	65.09	353.1	4.29	18.83						
IHC= 350 PPM/HEXANE					HOT TRANS	1.71	15.19	132.4	2.16	54.95						
ICO(ACT) 9.40 % CO					72 FTP	5.29	64.35	353.3	3.27	18.83						
ICO(SPEC)= 1.20 % CO					75 FTP	4.26	51.15	293.0	3.93	22.94						
OTHER TESTS: HIGH,LOW																
2087	72	FORD	TORO	351	COLD TRANS	3.51	51.88	710.8	4.62	11.04						
					COLD STAB	1.87	28.14	772.5	2.46	10.79						
IHC= 175 PPM/HEXANE					HOT TRANS	3.19	20.49	592.2	4.74	13.99						
ICO(ACT) .90 % CO					72 FTP	2.66	39.50	743.0	3.55	10.91						
ICO(SPEC)= .10 % CO					75 FTP	2.57	30.94	710.6	3.53	11.56						
OTHER TESTS: HIGH,LOW																
2088	72	FORD	MAVE	200	COLD TRANS	3.91	20.85	513.0	7.06	15.90						
					COLD STAB	2.29	21.94	417.8	3.71	19.32						
IHC= 100 PPM/HEXANE					HOT TRANS	2.03	12.47	391.5	5.77	21.27						
ICO(ACT) .90 % CO					72 FTP	3.07	21.42	463.3	4.69	17.51						
ICO(SPEC)= 1.50 % CO					75 FTP	2.55	19.13	430.2	4.96	18.95						
OTHER TESTS: HIGH,LOW																
2089	72	FORD	LTD	351	COLD TRANS	4.25	59.56	756.8	9.29	10.27						
					COLD STAB	2.32	10.42	741.6	6.57	11.60						
IHC= 25 PPM/HEXANE					HOT TRANS	3.05	16.27	652.4	9.50	12.90						
ICO(ACT) .70 % CO					72 FTP	3.24	33.94	748.9	7.97	10.92						
ICO(SPEC)= .15 % CO					75 FTP	2.92	22.13	720.4	7.93	11.61						
OTHER TESTS: HIGH,LOW																
2090	72	FORD	STAW	400	COLD TRANS	4.28	64.59	801.5	8.03	9.68						
					COLD STAB	2.51	35.03	747.4	5.29	10.95						
IHC= 350 PPM/HEXANE					HOT TRANS	3.38	27.22	680.8	9.23	12.09						
ICO(ACT) 6.80 % CO					72 FTP	3.35	49.18	773.3	7.17	10.30						
ICO(SPEC)= .10 % CO					75 FTP	3.11	38.98	740.3	6.92	10.93						
OTHER TESTS: HIGH,LOW																

EXHAUST EMISSIONS REPORTED IN GRAMS PER MILE
FUEL ECONOMY IN MILES PER GALLON

APPENDIX C

LISTING OF FEDERAL TEST PROCEDURE RESULTS
ON INDIVIDUAL VEHICLES

WASHINGTON, D.C.

VEHICLE NUMBER	YEAR	MAKE	MODEL	CID	TEST TYPE	HC	CO	CO2	NOXC	FUEL ECONOMY	----------- LIGHT HYDROCARBONS --------- METHANE (CH4)	ETHANE (C2H6)	PROPANE (C3H8)	BENZENE (C6H6)	ACETYLENE (C2H2)	ALIPHATIC ALDEHYDES (R-CHO)
2091	72	MERC	MARQ	429	COLD TRANS	7.88	160.10	639.8	4.18	9.68						
					COLD STAB	7.93	213.55	600.0	2.16	9.23						
IHC= 500 PPM/HEXANE					HOT TRANS	6.90	115.50	562.0	5.17	11.59						
ICO(ACT) 8.50 % CO					72 FTP	7.90	187.96	619.0	3.60	9.44						
ICO(SPEC)= .10 % CO					75 FTP	7.64	175.80	597.8	3.40	9.88						
OTHER TESTS: HIGH,LOW																
2092	72	OLDS	DELT	350	COLD TRANS	6.07	94.30	773.4	6.23	9.43						
					COLD STAB	4.75	88.60	648.4	3.86	11.05						
IHC= 270 PPM/HEXANE					HOT TRANS	4.67	50.00	617.8	6.67	12.48						
ICO(ACT) 3.70 % CO					72 FTP	5.38	91.33	708.2	5.21	10.21						
ICO(SPEC)= NONE % CO					75 FTP	5.00	79.24	665.8	5.11	11.00						
OTHER TESTS: HIGH,LOW																
2093	72	PLYM	DUST	225	COLD TRANS	3.79	72.78	419.2	5.44	16.27						
					COLD STAB	2.23	41.93	387.2	3.31	19.28						
IHC= 170 PPM/HEXANE					HOT TRANS	2.23	29.53	371.0	5.36	20.92						
ICO(ACT) 4.60 % CO					72 FTP	2.98	56.70	402.5	4.29	17.71						
ICO(SPEC)= .05 % CO					75 FTP	2.55	44.90	389.3	4.31	18.96						
OTHER TESTS: HIGH,LOW																
2094	72	PLYM	SUBU	360	COLD TRANS	5.68	95.92	742.3	4.57	9.74						
					COLD STAB	5.00	118.65	674.7	6.57	10.12						
IHC= 190 PPM/HEXANE					HOT TRANS	3.51	63.78	656.8	9.62	11.55						
ICO(ACT) 7.60 % CO					72 FTP	5.32	107.77	707.1	8.03	9.93						
ICO(SPEC)= .50 % CO					75 FTP	4.73	99.00	683.7	6.99	10.38						
OTHER TESTS: HIGH,LOW																
2095	72	PONT	CATA	400	COLD TRANS	37.67	76.50	754.9	5.21	8.92						
					COLD STAB	34.89	48.09	700.1	3.64	10.01						
IHC=1,900 PPM/HEXANE					HOT TRANS	29.43	28.29	635.9	5.53	11.47						
ICO(ACT) 3.00 % CO					72 FTP	36.22	61.69	726.3	4.55	9.46						
ICO(SPEC)= NONE % CO					75 FTP	33.97	48.53	693.8	4.48	10.11						
OTHER TESTS: HIGH,LOW																

EXHAUST EMISSIONS REPORTED IN GRAMS PER MILE
FUEL ECONOMY IN MILES PER GALLON

APPENDIX C

LISTING OF FEDERAL TEST PROCEDURE RESULTS
ON INDIVIDUAL VEHICLES

WASHINGTON, D.C.

VEHICLE NUMBER	YEAR	MAKE	MODEL	CID	TEST TYPE	HC	CO	CO2	NOXC	FUEL ECONOMY	LIGHT HYDROCARBONS: METHANE (CH4)	ETHANE (C2H6)	PROPANE (C3H8)	BENZENE (C6H6)	ACETYLENE (C2H2)	ALIPHATIC ALDEHYDES (R-CHO)
2096	72	PONT	LEMA	350	COLD TRANS	9.05	81.63	634.2	5.43	11.22						
					COLD STAB	5.55	103.32	599.4	2.28	11.39						
IHC= 600 PPM/HEXANE					HOT TRANS	4.19	49.28	553.2	6.05	13.78						
ICO(ACT) 1.54 % CO					72 FTP	7.22	92.94	616.1	4.08	11.30						
ICO(SPEC)= NONE % CO					75 FTP	5.90	84.11	594.0	3.95	11.91						
OTHER TESTS: HIGH,LOW																
2097	72	DATS	510	097	COLD TRANS	3.67	17.09	345.8	6.16	23.09						
					COLD STAB	3.63	16.03	329.0	3.46	24.27						
IHC= 550 PPM/HEXANE					HOT TRANS	2.85	9.48	278.7	5.50	29.36						
ICO(ACT) 3.60 % CO					72 FTP	3.65	16.54	337.1	4.44	23.69						
ICO(SPEC)= 2.00 % CO					75 FTP	3.42	14.46	318.7	4.57	25.19						
OTHER TESTS: HIGH,LOW																
2098	72	TOYO	CORL	097	COLD TRANS	4.08	28.68	287.9	4.33	25.68						
					COLD STAB	3.62	24.23	292.9	2.10	25.93						
IHC= 550 PPM/HEXANE					HOT TRANS	2.81	17.31	272.8	3.67	28.75						
ICO(ACT) 3.20 % CO					72 FTP	3.84	26.36	290.5	2.85	25.79						
ICO(SPEC)= 2.00 % CO					75 FTP	3.49	23.26	286.4	2.99	26.57						
OTHER TESTS: HIGH,LOW																
2099	72	VOLK	SUPE	097	COLD TRANS	3.76	49.42	356.0	4.75	19.93						
					COLD STAB	3.19	54.08	335.1	2.25	20.64						
IHC= 120 PPM/HEXANE					HOT TRANS	2.47	36.44	313.7	3.87	23.44						
ICO(ACT) 4.80 % CO					72 FTP	3.46	51.85	345.1	3.03	20.28						
ICO(SPEC)= NONE % CO					75 FTP	3.11	48.31	333.6	3.21	21.16						
OTHER TESTS: HIGH,LOW																
2100	72	VOLK	SUPE	097	COLD TRANS	5.25	54.89	330.1	3.81	20.50						
					COLD STAB	4.11	43.87	313.0	2.01	22.48						
IHC= 840 PPM/HEXANE					HOT TRANS	3.42	31.88	272.5	2.93	26.64						
ICO(ACT) 2.50 % CO					72 FTP	4.65	49.14	321.2	2.45	21.48						
ICO(SPEC)= NONE % CO					75 FTP	4.15	42.86	305.5	2.63	22.99						
OTHER TESTS: HIGH,LOW																

EXHAUST EMISSIONS REPORTED IN GRAMS PER MILE
FUEL ECONOMY IN MILES PER GALLON

APPENDIX C

LISTING OF FEDERAL TEST PROCEDURE RESULTS
ON INDIVIDUAL VEHICLES

WASHINGTON, D.C.

VEHICLE NUMBER	YEAR	MAKE	MODEL	CID	TEST TYPE	HC	CO	CO2	NOXC	FUEL ECONOMY	LIGHT HYDROCARBONS: METHANE (CH4)	ETHANE (C2H6)	PROPANE (C3H8)	BENZENE (C6H6)	ACETYLENE (C2H2)	ALIPHATIC ALDEHYDES (R-CHO)
4046	74	AMER	MATA	304	COLD TRANS	3.96	37.50	644.3	5.23	12.40						
					COLD STAB	3.54	25.93	585.0	4.34	13.93						
IHC= 110 PPM/HEXANE					HOT TRANS	3.18	16.87	560.2	5.47	14.87						
ICO(ACT) .30 % CO					72 FTP	3.74	31.47	613.4	4.88	13.15						
ICO(SPEC)= .50 % CO					75 FTP	3.53	25.84	590.5	4.83	13.81						
OTHER TESTS: NONE																
4047	74	BUIC	LIMI	455	COLD TRANS	4.93	57.24	893.7	10.08	8.88						
					COLD STAB	4.15	12.95	855.7	8.65	9.98						
IHC= 145 PPM/HEXANE					HOT TRANS	3.46	14.80	742.4	10.04	11.43						
ICO(ACT) .15 % CO					72 FTP	4.52	34.15	873.9	9.31	9.42						
ICO(SPEC)= .30 % CO					75 FTP	4.12	22.57	832.6	9.32	10.07						
OTHER TESTS: NONE																
4048	74	BUIC	REGA	350	COLD TRANS	4.30	70.47	706.2	3.62	10.69						
					COLD STAB	3.53	70.38	680.2	2.10	11.07						
IHC= 70 PPM/HEXANE					HOT TRANS	2.95	28.36	615.9	3.81	13.25						
ICO(ACT) .80 % CO					72 FTP	3.90	70.43	692.6	2.92	10.88						
ICO(SPEC)= NONE % CO					75 FTP	3.53	58.94	668.0	2.88	11.50						
OTHER TESTS: NONE																
4049	74	CHEV	VEGA	140	COLD TRANS	3.01	38.89	401.2	2.46	18.81						
					COLD STAB	2.73	10.53	378.7	2.16	21.99						
IHC= 840 PPM/HEXANE					HOT TRANS	2.40	21.56	337.1	2.22	23.45						
ICO(ACT) .20 % CO					72 FTP	2.86	24.11	389.5	2.19	20.33						
ICO(SPEC)= .50 % CO					75 FTP	2.70	19.38	372.0	2.24	21.59						
OTHER TESTS: NONE																
4050	74	CHEV	CAME	350	COLD TRANS	3.44	49.93	761.9	4.41	10.43						
					COLD STAB	1.50	55.63	760.4	2.52	10.41						
IHC= 65 PPM/HEXANE					HOT TRANS	1.89	39.60	662.9	4.28	12.14						
ICO(ACT) 1.70 % CO					72 FTP	2.43	52.90	761.1	3.36	10.41						
ICO(SPEC)= .50 % CO					75 FTP	2.00	50.08	734.1	3.39	10.83						
OTHER TESTS: NONE																

EXHAUST EMISSIONS REPORTED IN GRAMS PER MILE
FUEL ECONOMY IN MILES PER GALLON

APPENDIX C

LISTING OF FEDERAL TEST PROCEDURE RESULTS ON INDIVIDUAL VEHICLES

WASHINGTON, D.C.

VEHICLE NUMBER	YEAR	MAKE	MODEL	CID	TEST TYPE	HC	CO	CO2	NOXC	FUEL ECONOMY	METHANE (CH4)	ETHANE (C2H6)	PROPANE (C3H8)	BENZENE (C6H6)	ACETYLENE (C2H2)	ALIPHATIC ALDEHYDES (R-CHO)
											LIGHT HYDROCARBONS					
4051	74	CHEV	NOVA	250	COLD TRANS	4.74	72.33	484.0	1.64	14.48						
					COLD STAB	3.04	68.15	475.8	1.32	14.98						
IHC=1,050 PPM/HEXANE					HOT TRANS	2.82	35.89	445.0	1.93	17.40						
ICO(ACT) 4.80 % CO					72 FTP	3.86	70.16	479.7	1.61	14.74						
ICO(SPEC)= .30 % CO					75 FTP	3.33	60.21	469.0	1.55	15.45						
OTHER TESTS: NONE																
4052	74	CHEV	MALI	350	COLD TRANS	4.70	59.12	742.3	2.18	10.44						
					COLD STAB	3.55	43.60	785.9	1.11	10.25						
IHC= 95 PPM/HEXANE					HOT TRANS	1.02	32.56	689.4	1.86	11.93						
ICO(ACT) 1.70 % CO					72 FTP	4.10	51.03	765.0	1.47	10.34						
ICO(SPEC)= .50 % CO					75 FTP	3.10	43.78	750.6	1.53	10.70						
OTHER TESTS: NONE																
4053	74	CHEV	IMPA	350	COLD TRANS	5.18	69.01	810.6	5.59	9.49						
					COLD STAB	2.74	11.58	758.6	3.22	11.30						
IHC= 60 PPM/HEXANE					HOT TRANS	3.31	19.78	674.2	4.78	12.40						
ICO(ACT) .15 % CO					72 FTP	3.91	39.07	783.5	3.97	10.35						
ICO(SPEC)= .50 % CO					75 FTP	3.40	25.64	746.3	4.14	11.13						
OTHER TESTS: NONE																
4054	74	CHEV	CAPR	400	COLD TRANS	2.30	28.88	878.9	2.61	9.52						
					COLD STAB	1.44	23.90	893.5	1.42	9.48						
IHC= 180 PPM/HEXANE					HOT TRANS	1.32	24.06	760.5	2.13	11.06						
ICO(ACT) .10 % CO					72 FTP	1.86	26.28	886.5	1.76	9.50						
ICO(SPEC)= .50 % CO					75 FTP	1.59	24.97	854.2	1.86	9.87						
OTHER TESTS: NONE																
4055	74	DODG	MONA	360	COLD TRANS	5.68	112.36	717.6	6.22	9.73						
					COLD STAB	4.72	109.64	688.6	3.77	10.13						
IHC= 275 PPM/HEXANE					HOT TRANS	3.54	67.79	622.1	8.55	11.99						
ICO(ACT) 8.20 % CO					72 FTP	5.18	110.94	702.5	6.06	9.93						
ICO(SPEC)= .50 % CO					75 FTP	4.59	98.78	676.4	5.58	10.48						
OTHER TESTS: NONE																

EXHAUST EMISSIONS REPORTED IN GRAMS PER MILE
FUEL ECONOMY IN MILES PER GALLON

APPENDIX C

LISTING OF FEDERAL TEST PROCEDURE RESULTS ON INDIVIDUAL VEHICLES

WASHINGTON, D.C.

VEHICLE NUMBER	YEAR	MAKE	MODEL	CID	TEST TYPE	HC	CO	CO2	NOXC	FUEL ECONOMY	LIGHT HYDROCARBONS METHANE (CH4)	ETHANE (C2H6)	PROPANE (C3H8)	BENZENE (C6H6)	ACETYLENE (C2H2)	ALIPHATIC ALDEHYDES (R-CHO)
4056	74	DODG	DART	225	COLD TRANS	5.94	58.47	531.2	9.06	13.82						
					COLD STAB	2.52	49.67	434.0	3.97	17.07						
IHC= 180 PPM/HEXANE					HOT TRANS	2.26	21.91	428.2	7.64	18.90						
ICO(ACT) 5.40 % CO					72 FTP	4.16	53.89	480.5	5.73	15.34						
ICO(SPEC)= .50 % CO					75 FTP	3.15	43.91	452.4	6.02	16.70						
OTHER TESTS: NONE																
4057	74	FORD	PINT	122	COLD TRANS	5.59	64.91	438.1	1.78	15.91						
					COLD STAB	3.51	72.19	370.3	1.12	17.94						
IHC= 220 PPM/HEXANE					HOT TRANS	3.03	44.79	336.6	1.93	21.32						
ICO(ACT) 7.20 % CO					72 FTP	4.51	68.71	402.7	1.51	16.90						
ICO(SPEC)= .50 % CO					75 FTP	3.81	63.22	375.0	1.48	18.24						
OTHER TESTS: NONE																
4058		FORD	TORO	302	COLD TRANS	4.38	8.20	660.5	5.37	12.91						
					COLD STAB	2.82	24.62	634.8	2.30	13.00						
IHC= 170 ..../.EXANE					HOT TRANS	2.84	15.38	587.2	5.66	14.30						
ICO(ACT) 2.30 % CO					72 FTP	3.56	16.76	647.1	3.91	12.96						
ICO(SPEC)= .50 % CO					75 FTP	3.14	18.72	627.1	3.85	13.31						
OTHER TESTS: NONE																
4059	74	FORD	MAVE	250	COLD TRANS	3.33	52.86	584.9	3.09	13.08						
					COLD STAB	2.52	45.33	545.2	1.56	14.21						
IHC= 150 PPM/HEXANE					HOT TRANS	2.77	37.98	483.0	2.28	16.10						
ICO(ACT) 3.60 % CO					72 FTP	2.91	48.94	564.2	1.91	13.64						
ICO(SPEC)= .25 % CO					75 FTP	2.75	44.87	536.4	2.07	14.41						
OTHER TESTS: NONE																
4060	74	FORD	TORI	351	COLD TRANS	6.01	69.86	790.8	3.80	9.65						
					COLD STAB	1.91	22.17	864.1	1.90	9.81						
IHC= 90 PPM/HEXANE					HOT TRANS	2.32	21.91	727.7	3.27	11.53						
ICO(ACT) .60 % CO					72 FTP	3.87	44.99	829.0	2.56	9.73						
ICO(SPEC)= .20 % CO					75 FTP	2.86	31.91	811.8	2.66	10.19						
OTHER TESTS: NONE																

EXHAUST EMISSIONS REPORTED IN GRAMS PER MILE
FUEL ECONOMY IN MILES PER GALLON

APPENDIX C

LISTING OF FEDERAL TEST PROCEDURE RESULTS ON INDIVIDUAL VEHICLES

WASHINGTON, D.C.

VEHICLE NUMBER	YEAR	MAKE	MODEL	CID	TEST TYPE	HC	CO	CO2	NOXC	FUEL ECONOMY	LIGHT HYDROCARBONS: METHANE (CH4)	ETHANE (C2H6)	PROPANE (C3H8)	BENZENE (C6H6)	ACETYLENE (C2H2)	ALIPHATIC ALDEHYDES (R-CHO)
4061	74	FORD	COUN	400	COLD TRANS	7.14	65.29	775.9	5.45	9.85						
					COLD STAB	2.60	48.47	696.9	2:16	11.36						
IHC= 110 PPM/HEXANE					HOT TRANS	3.00	34.84	644.1	4.73	12.53						
ICO(ACT) .50 % CO					72 FTP	4.77	56.52	734.7	3.39	10.58						
ICO(SPEC)= .40 % CO					75 FTP	3.64	48.21	698.8	3.54	11.29						
OTHER TESTS: NONE																
4062	74	LINC	CONT	460	COLD TRANS	3.29	46.38	909.1	.98	8.94						
					COLD STAB	2.30	28.42	1,013.1	2.44	8.33						
IHC= 40 PPM/HEXANE					HOT TRANS	2.51	35.43	847.1	4.74	9.74						
ICO(ACT) .40 % CO					72 FTP	2.78	37.02	963.4	3.54	8.61						
ICO(SPEC)= .40 % CO					75 FTP	2.56	34.03	946.4	2.77	8.80						
OTHER TESTS: NONE																
4063	74	MERC	COUG	351	COLD TRANS	2.98	60.93	759.2	2.10	10.27						
					COLD STAB	1.30	43.38	808.9	1.27	10.07						
IHC= 90 PPM/HEXANE					HOT TRANS	1.79	38.84	663.7	2.03	12.15						
ICO(ACT) 1.50 % CO					72 FTP	2.11	51.78	785.1	1.63	10.16						
ICO(SPEC)= .50 % CO					75 FTP	1.78	45.76	759.1	1.65	10.60						
OTHER TESTS: NONE																
4064	74	OLDS	CUTL	350	COLD TRANS	4.41	39.30	787.1	3.33	10.29						
					COLD STAB	2.64	7.50	744.1	2.02	11.61						
IHC= 400 PPM/HEXANE					HOT TRANS	2.56	14.93	695.7	2.57	12.20						
ICO(ACT) .20 % CO					72 FTP	3.49	22.72	764.7	2.28	10.93						
ICO(SPEC)= .20 % CO					75 FTP	2.98	16.07	739.8	2.44	11.46						
OTHER TESTS: NONE																
4065	74	OLDS	DELT	350	COLD TRANS	6.06	50.99	1,040.2	4.39	7.79						
					COLD STAB	1.85	6.36	960.8	3.23	9.09						
IHC= 30 PPM/HEXANE					HOT TRANS	1.93	8.15	870.9	4.23	9.97						
ICO(ACT) .17 % CO					72 FTP	3.87	27.73	998.8	3.71	8.41						
ICO(SPEC)= .20 % CO					75 FTP	2.74	16.04	952.6	3.74	8.99						
OTHER TESTS: NONE																

EXHAUST EMISSIONS REPORTED IN GRAMS PER MILE
FUEL ECONOMY IN MILES PER GALLON

APPENDIX C

LISTING OF FEDERAL TEST PROCEDURE RESULTS ON INDIVIDUAL VEHICLES

WASHINGTON, D.C.

VEHICLE NUMBER	YEAR	MAKE	MODEL	CID	TEST TYPE	HC	CO	CO2	NOXC	FUEL ECONOMY	LIGHT HYDROCARBONS METHANE (CH4)	ETHANE (C2H6)	PROPANE (C3H8)	BENZENE (C6H6)	ACETYLENE (C2H2)	ALIPHATIC ALDEHYDES (R-CHO)
4066	74	OLDS	REGE	455	COLD TRANS	3.01	42.15	910.4	5.44	9.00						
					COLD STAB	1.87	14.24	986.6	3.18	8.74						
IHC= 75 PPM/HEXANE					HOT TRANS	2.20	15.98	810.9	4.56	10.53						
ICO(ACT) .28 % CO					72 FTP	2.42	27.60	950.1	3.84	8.86						
ICO(SPEC)= .50 % CO					75 FTP	2.20	20.46	923.0	4.02	9.22						
OTHER TESTS: NONE																
4067	74	PLYM	DUST	318	COLD TRANS	6.70	74.81	573.3	2.93	12.46						
					COLD STAB	3.13	51.02	570.5	1.78	13.43						
IHC= 160 PPM/HEXANE					HOT TRANS	2.89	22.67	524.8	3.20	15.59						
ICO(ACT) 2.80 % CO					72 FTP	4.84	62.40	571.9	2.46	12.95						
ICO(SPEC)= .50 % CO					75 FTP	3.80	48.18	558.6	2.40	13.73						
OTHER TESTS: NONE																
4068	74	PLYM	VALI	225	COLD TRANS	6.10	52.55	485.9	4.85	15.10						
					COLD STAB	5.11	54.60	540.3	1.74	13.81						
IHC= 225 PPM/HEXANE					HOT TRANS	4.07	31.93	426.1	4.16	18.14						
ICO(ACT) .70 % CO					72 FTP	5.58	53.62	514.3	2.90	14.40						
ICO(SPEC)= .50 % CO					75 FTP	5.03	47.99	497.9	3.04	15.06						
OTHER TESTS: NONE																
4069	74	PONT	GRNA	400	COLD TRANS	5.94	88.55	795.3	7.74	9.31						
					COLD STAB	4.38	92.65	723.4	4.84	10.05						
IHC= 260 PPM/HEXANE					HOT TRANS	3.64	43.55	725.2	8.09	11.02						
ICO(ACT) 5.80 % CO					72 FTP	5.12	90.69	757.8	6.39	9.68						
ICO(SPEC)= .30 % CO					75 FTP	4.50	78.41	738.7	6.32	10.13						
OTHER TESTS: NONE																
4070	74	PONT	LEMA	350	COLD TRANS	7.74	52.46	868.1	5.20	9.10						
					COLD STAB	4.77	21.47	801.7	3.56	10.43						
IHC= 450 PPM/HEXANE					HOT TRANS	4.03	24.05	750.9	5.51	11.07						
ICO(ACT) 2.80 % CO					72 FTP	6.19	36.30	833.5	4.49	9.75						
ICO(SPEC)= .30 % CO					75 FTP	5.18	28.55	801.5	4.43	10.28						
OTHER TESTS: NONE																

EXHAUST EMISSIONS REPORTED IN GRAMS PER MILE
FUEL ECONOMY IN MILES PER GALLON

APPENDIX C

LISTING OF FEDERAL TEST PROCEDURE RESULTS
ON INDIVIDUAL VEHICLES

WASHINGTON, D.C.

VEHICLE NUMBER	YEAR	MAKE	MODEL	CID	TEST TYPE	HC	CO	CO2	NOXC	FUEL ECONOMY	LIGHT HYDROCARBONS: METHANE (CH4)	ETHANE (C2H6)	PROPANE (C3H8)	BENZENE (C6H6)	ACETYLENE (C2H2)	ALIPHATIC ALDEHYDES (R-CHO)
4071	74	DATS	710	110	COLD TRANS	3.08	31.83	416.7	3.07	18.63						
					COLD STAB	2.19	16.33	419.1	1.98	19.65						
IHC= 130 PPM/HEXANE					HOT TRANS	2.30	15.23	370.3	2.63	22.12						
ICO(ACT) .70 % CO					72 FTP	2.62	23.75	418.0	2.29	19.14						
ICO(SPEC)= 3.00 % CO					75 FTP	2.40	19.22	405.3	2.38	20.03						
OTHER TESTS: NONE																
4072	74	MAZD	RX2	070	COLD TRANS	8.13	27.52	620.2	1.63	12.87						
					COLD STAB	7.20	42.76	549.7	.94	13.87						
IHC= 65 PPM/HEXANE					HOT TRANS	6.30	38.72	424.8	1.82	17.56						
ICO(ACT) .20 % CO					72 FTP	7.65	35.47	583.4	1.36	13.38						
ICO(SPEC)= 1.00 % CO					75 FTP	7.15	38.52	530.1	1.32	14.47						
OTHER TESTS: NONE																
4073	74	TOYO	CORL	097	COLD TRANS	3.59	26.15	384.1	8.61	20.34						
					COLD STAB	3.33	35.72	362.3	3.05	20.69						
IHC= 300 PPM/HEXANE					HOT TRANS	3.01	20.19	339.2	7.09	23.32						
ICO(ACT) 3.40 % CO					72 FTP	3.45	31.14	372.7	4.99	20.52						
ICO(SPEC)= 2.00 % CO					75 FTP	3.30	29.51	360.4	5.30	21.27						
OTHER TESTS: NONE																
4074	74	VOLK	SUPE	097	COLD TRANS	4.55	43.94	315.3	3.00	22.27						
					COLD STAB	3.83	48.08	310.2	1.98	22.32						
IHC= 270 PPM/HEXANE					HOT TRANS	3.42	34.06	286.2	2.86	25.32						
ICO(ACT) 8.80 % CO					72 FTP	4.18	46.10	312.6	2.40	22.28						
ICO(SPEC)= NONE % CO					75 FTP	3.87	43.40	304.7	2.43	23.04						
OTHER TESTS: NONE																
4075	74	VOLK	SUPE	097	COLD TRANS	5.65	65.55	314.0	3.22	20.41						
					COLD STAB	5.62	89.88	298.9	1.75	19.39						
IHC= 700 PPM/HEXANE					HOT TRANS	4.33	51.42	284.9	2.96	23.41						
ICO(ACT) 10.00 % CO					72 FTP	5.64	78.24	306.1	2.33	19.86						
ICO(SPEC)= NONE % CO					75 FTP	5.27	74.38	298.2	2.38	20.55						
OTHER TESTS: NONE																

EXHAUST EMISSIONS REPORTED IN GRAMS PER MILE
FUEL ECONOMY IN MILES PER GALLON

APPENDIX C

LISTING OF FEDERAL TEST PROCEDURE RESULTS ON INDIVIDUAL VEHICLES

WASHINGTON, D.C.

VEHICLE NUMBER	YEAR	MAKE	MODEL	CID	TEST TYPE	HC	CO	CO2	NOXC	FUEL ECONOMY	LIGHT HYDROCARBONS: METHANE (CH4)	ETHANE (C2H6)	PROPANE (C3H8)	BENZENE (C6H6)	ACETYLENE (C2H2)	ALIPHATIC ALDEHYDES (R-CHO)
5011	75	AMC	HORN	258	COLD TRANS	2.33	38.53	574.4	4.27	13.81	.275	.055	.000	.000	.701	.187
IHC= 150 PPM/HEXANE					COLD STAB	1.50	7.80	503.0	3.44	17.07	.000	.000	.000	.000	.000	.222
ICO(ACT) .50 % CO					HOT TRANS	1.30	7.56	471.9	3.75	18.19	.000	.000	.000	.749	.000	.270
ICO(SPEC)= 1.00 % CO					72 FTP	1.90	22.51	537.2	3.59	15.34	.132	.026	.000	.000	.336	.205
OTHER TESTS: MODAL,HIGH,LOW					75 FTP	1.61	14.06	509.2	3.69	16.54	.056	.011	.000	.204	.144	.228
					HFET	2.78	3.45	414.1	3.06	20.72						
5012	75	BUIC	SKYL	231	COLD TRANS	3.50	37.53	572.2	6.53	13.81	.481	.100	.000	2.225	.083	.154
IHC= 110 PPM/HEXANE					COLD STAB	.67	6.18	546.1	6.23	15.91	.120	.058	.000	.856	.000	.084
ICO(ACT) .50 % CO					HOT TRANS	.33	8.12	495.2	7.78	17.44	.194	.194	.000	.824	.000	.104
ICO(SPEC)= NONE % CO					72 FTP	2.02	21.19	558.6	6.97	14.83	.293	.078	.000	1.512	.040	.117
OTHER TESTS: MODAL,HIGH,LOW					75 FTP	1.16	13.16	537.6	6.72	15.79	.214	.104	.000	1.129	.017	.104
					HFET	.24	1.58	395.7	8.11	22.25						
5013	75	BUIC	ELEC	455	COLD TRANS	1.62	25.87	758.6	4.14	11.03	.261	.077	.000	1.072	.128	.119
IHC= 35 PPM/HEXANE					COLD STAB	.64	13.69	798.5	1.26	10.80	.207	.074	.000	1.411	.000	2.320
ICO(ACT) .35 % CO					HOT TRANS	.90	13.75	726.6	2.38	11.82	.247	.075	.000	.846	.000	.045
ICO(SPEC)= NONE % CO					72 FTP	1.11	19.52	779.4	1.80	10.90	.233	.076	.000	1.249	.061	1.266
OTHER TESTS: MODAL,HIGH,LOW					75 FTP	.91	16.21	770.6	2.16	11.10	.229	.075	.000	1.187	.026	1.246
					HFET	.24	5.64	575.4	2.29	15.17						
5014	75	BUIC	ELEC	455	COLD TRANS	1.93	25.12	825.0	4.70	10.19	.264	.091	.000	.610	.108	.147
IHC= 50 PPM/HEXANE					COLD STAB	1.21	24.70	766.1	1.45	10.97	.000	.002	.000	1.900	.000	.035
ICO(ACT) .65 % CO					HOT TRANS	1.13	15.13	710.9	3.38	12.02	.000	.000	.000	1.164	.000	.056
ICO(SPEC)= NONE % CO					72 FTP	1.55	24.90	794.3	2.37	10.58	.126	.045	.000	1.282	.052	.088
OTHER TESTS: MODAL,HIGH,LOW					75 FTP	1.33	22.17	763.2	2.64	11.06	.054	.020	.000	1.433	.022	.064
					HFET	.24	3.82	580.5	2.54	15.11						
5015	75	CADI	DEVI	500	COLD TRANS	.45	16.50	780.6	1.94	10.98	.506	.281	.000	2.785	.000	.117
IHC= 100 PPM/HEXANE					COLD STAB	.40	9.31	835.7	2.12	10.42	.508	.355	.000	2.526	.000	.009
ICO(ACT) .01 % CO					HOT TRANS	1.20	33.55	762.2	2.02	10.84	.623	.415	.000	2.785	.000	.020
ICO(SPEC)= NONE % CO					72 FTP	.42	12.75	809.3	2.07	10.68	.508	.320	.000	2.650	.000	.061
OTHER TESTS: MODAL,HIGH,LOW					75 FTP	.63	17.40	804.3	2.05	10.64	.539	.356	.000	2.650	.000	.034
					HFET	.55	34.56	614.9	1.76	13.23						

EXHAUST EMISSIONS REPORTED IN GRAMS PER MILE
FUEL ECONOMY IN MILES PER GALLON

APPENDIX C

LISTING OF FEDERAL TEST PROCEDURE RESULTS ON INDIVIDUAL VEHICLES

WASHINGTON, D.C.

VEHICLE NUMBER	YEAR	MAKE	MODEL	CID	TEST TYPE	HC	CO	CO2	NOXC	FUEL ECONOMY	LIGHT HYDROCARBONS METHANE (CH4)	ETHANE (C2H6)	PROPANE (C3H8)	BENZENE (C6H6)	ACETYLENE (C2H2)	ALIPHATIC ALDEHYDES (R-CHO)
5016	75	CHEV	VEGA	140	COLD TRANS	3.45	47.56	508.3	2.53	14.94	.054	.013	.000	.768	.093	.096
					COLD STAB	1.16	29.94	451.2	1.07	17.69	.212	.005	.000	.457	.109	.030
IHC= 400 PPM/HEXANE					HOT TRANS	3.45	16.26	437.8	2.14	18.71	.186	.005	.000	.236	.203	.035
ICO(ACT) 9.00 % CO					72 FTP	2.26	38.38	478.6	1.59	16.25	.136	.009	.000	.606	.097	.062
ICO(SPEC)= NONE % CO					75 FTP	2.26	29.83	459.3	1.66	17.29	.172	.006	.000	.461	.130	.045
OTHER TESTS: MODAL,HIGH,LOW					HFET	.17	2.20	389.6	1.45	22.55						
5017	75	CHEV	CAMA	250	COLD TRANS	1.64	22.19	579.9	2.50	14.31	.220	.055	.000	.860	.150	.113
					COLD STAB	.10	.42	578.2	1.38	15.32	.061	.030	.000	.437	.000	.053
IHC= 50 PPM/HEXANE					HOT TRANS	.62	3.62	475.2	1.89	18.38	.008	.011	.000	.000	.000	.064
ICO(ACT) .30 % CO					72 FTP	.84	10.84	579.0	1.62	14.82	.137	.042	.000	.640	.072	.082
ICO(SPEC)= NONE % CO					75 FTP	.56	5.78	550.4	1.75	15.81	.079	.030	.000	.405	.030	.068
OTHER TESTS: MODAL,HIGH,LOW					HFET	.08	1.37	400.6	2.20	22.03						
5018	75	CHEV	MONT	350	COLD TRANS	3.32	64.80	621.5	3.52	12.09	.802	.364	.000	2.785	.484	.084
					COLD STAB	1.21	28.68	612.4	1.45	13.42	.322	.179	.000	2.557	.000	.034
IHC= 40 PPM/HEXANE					HOT TRANS	.71	15.41	571.1	3.31	14.85	.242	.147	.000	2.128	.000	.029
ICO(ACT) 1.20 % CO					72 FTP	2.22	45.97	616.8	2.34	12.75	.552	.268	.000	2.666	.232	.058
ICO(SPEC)= NONE % CO					75 FTP	1.51	32.49	603.0	2.38	13.47	.399	.208	.000	2.486	.099	.043
OTHER TESTS: MODAL,HIGH,LOW					HFET	.11	3.34	502.4	4.24	17.47						
5019	75	CHEV	IMPA	350	COLD TRANS	2.06	18.40	724.9	3.02	11.67						
					COLD STAB	.15	2.58	726.1	1.34	12.15						
IHC= 25 PPM/HEXANE					HOT TRANS	.40	9.18	627.4	1.76	13.80						
ICO(ACT). .03 % CO					72 FTP	1.07	10.16	725.6	1.54	11.91						
ICO(SPEC)= NONE % CO					75 FTP	.61	7.64	698.9	1.80	12.45						
OTHER TESTS: MODAL,HIGH,LOW					HFET	.25	17.31	561.8	1.15	15.05						
5020	75	CHEV	IMPA	350	COLD TRANS	1.28	18.40	715.4	4.03	11.86	.139	.047	.000	.000	.072	.097
					COLD STAB	.12	.94	655.9	1.50	13.49	.071	.025	.000	.000	.000	.000
IHC= 20 PPM/HEXANE					HOT TRANS	.25	3.62	619.7	3.41	14.18	.072	.027	.000	.000	.000	.008
ICO(ACT) .02 % CO					72 FTP	.67	9.30	684.4	2.41	12.65	.104	.036	.000	.000	.034	.046
ICO(SPEC)= NONE % CO					75 FTP	.39	5.27	658.3	2.54	13.29	.085	.030	.000	.000	.014	.022
OTHER TESTS: MODAL,HIGH,LOW					HFET	.04	.62	520.6	3.32	17.01						

EXHAUST EMISSIONS REPORTED IN GRAMS PER MILE
FUEL ECONOMY IN MILES PER GALLON

APPENDIX C

LISTING OF FEDERAL TEST PROCEDURE RESULTS ON INDIVIDUAL VEHICLES

WASHINGTON, D.C.

VEHICLE NUMBER	YEAR	MAKE	MODEL	CID	TEST TYPE	HC	CO	CO2	NOXC	FUEL ECONOMY	LIGHT HYDROCARBONS METHANE (CH4)	ETHANE (C2H6)	PROPANE (C3H8)	BENZENE (C6H6)	ACETYLENE (C2H2)	ALIPHATIC ALDEHYDES (R-CHO)
5021	75	CHEV	CAPR	400	COLD TRANS	4.15	48.50	842.8	4.64	9.52	1.172	.376	.000	2.785	1.596	.213
					COLD STAB	.17	.00	767.2	4.43	11.56	.008	.051	.000	2.557	.000	.122
IHC= 23 PPM/HEXANE					HOT TRANS	.46	5.08	718.7	5.90	12.19	.022	.097	.000	.384	.000	2.430
ICO(ACT) .03 % CO					72 FTP	2.07	23.21	803.4	5.13	10.48	.566	.206	.000	2.666	.764	.166
ICO(SPEC)= NONE % CO					75 FTP	1.07	11.37	74[illegible].5	4.87	11.22	.252	.130	.000	2.011	.328	.771
OTHER TESTS: MODAL,HIGH,LOW					HFET	.08	.07	591.0	6.47	15.01						
5022	75	CHRY	NEWY	440	COLD TRANS	2.19	74.37	945.3	3.06	8.30	.454	.116	.000	1.164	.000	.031
					COLD STAB	.11	3.57	942.7	2.45	9.35	.033	1.278	.000	.485	1.534	1.749
IHC= 40 PPM/HEXANE					HOT TRANS	.33	3.74	829.4	3.35	10.61	.075	2.228	.000	.206	.582	2.066
ICO(ACT) .05 % CO					72 FTP	1.11	37.46	943.9	2.88	8.82	.234	.722	.000	.810	.800	.927
ICO(SPEC)= .30 % CO					75 FTP	.60	18.19	912.3	2.82	9.41	.131	1.298	.000	.549	.958	1.482
OTHER TESTS: MODAL,HIGH,LOW					HFET	.02	.54	612.7	3.84	14.46						
5023	75	DODG	CHAR	360	COLD TRANS	2.33	47.16	725.3	4.24	11.00	.857	.153	.000	.930	.189	.129
					COLD STAB	.25	1.08	771.0	3.48	11.47	.240	.069	.000	.000	.000	.047
IHC= 30 PPM/HEXANE					HOT TRANS	.54	3.24	645.9	4.03	13.60	.272	.103	.000	.286	.000	.038
ICO(ACT) .03 % CO					72 FTP	1.25	23.13	749.1	3.74	11.24	.536	.109	.000	.445	.090	.086
ICO(SPEC)= .30 % CO					75 FTP	.76	11.15	727.4	3.79	11.87	.376	.095	.000	.269	.038	.061
OTHER TESTS: MODAL,HIGH,LOW					HFET	.15	.90	507.7	5.25	17.42						
5024	75	DODG	DART	225	COLD TRANS	3.54	72.10	478.6	7.21	14.72	1.791	.236	.000	2.245	.470	.101
					COLD STAB	3.92	117.70	419.4	3.20	14.39	2.342	.350	.000	1.677	.000	.040
IHC= 270 PPM/HEXANE					HOT TRANS	2.46	56.13	418.1	7.01	17.27	1.247	.267	.000	.668	.167	.054
ICO(ACT) 9.90 % CO					72 FTP	3.74	95.88	447.8	5.02	14.54	2.078	.296	.000	1.949	.225	.069
ICO(SPEC)= .30 % CO					75 FTP	3.44	91.52	431.2	5.06	15.14	1.930	.304	.000	1.519	.142	.056
OTHER TESTS: MODAL,HIGH,LOW					HFET	.43	8.17	347.1	8.12	24.56						
5025	75	FORD	MUST	140	COLD TRANS	1.19	20.42	552.2	2.63	15.09	.261	.069	.000	1.236	.532	.250
					COLD STAB	.73	11.10	475.4	1.91	17.93	.125	.063	.000	1.066	.253	.259
IHC= 30 PPM/HEXANE					HOT TRANS	.62	7.43	452.5	2.31	19.04	.080	.030	.000	.788	.286	.025
ICO(ACT) .05 % CO					72 FTP	.95	15.56	512.2	2.10	16.44	.190	.066	.000	1.148	.386	.255
ICO(SPEC)= NONE % CO					75 FTP	.79	12.02	485.0	2.16	17.52	.141	.055	.000	1.025	.319	.193
OTHER TESTS: MODAL,HIGH,LOW					HFET	.26	2.35	392.5	1.78	22.36						

EXHAUST EMISSIONS REPORTED IN GRAMS PER MILE
FUEL ECONOMY IN MILES PER GALLON

APPENDIX C

LISTING OF FEDERAL TEST PROCEDURE RESULTS
ON INDIVIDUAL VEHICLES

WASHINGTON, D.C.

VEHICLE NUMBER	YEAR	MAKE	MODEL	CID	TEST TYPE	HC	CO	CO2	NOXC	FUEL ECONOMY	---- LIGHT HYDROCARBONS ---- METHANE (CH4)	ETHANE (C2H6)	PROPANE (C3H8)	BENZENE (C6H6)	ACETYLENE (C2H2)	ALIPHATIC ALDEHYDES (R-CHO)
5026	75	FORD	TORI	351	COLD TRANS	1.88	26.25	806.3	3.88	10.40	.412	.075	.000	.908	.083	.252
					COLD STAB	.76	4.41	810.9	2.20	10.82	.069	.023	.000	.388	.000	.278
IHC= 35 PPM/HEXANE					HOT TRANS	.92	3.35	675.9	3.20	12.97	.055	.019	.000	.484	.000	.197
ICO(ACT) .05 % CO					72 FTP	1.30	14.86	808.7	2.68	10.61	.233	.048	.000	.637	.040	.266
ICO(SPEC)= NONE % CO					75 FTP	1.04	8.62	773.1	2.82	11.23	.136	.032	.000	.521	.017	.250
OTHER TESTS: MODAL,HIGH,LOW					HFET	.30	1.62	535.7	2.80	16.46						
5027	75	FORD	MAVE	250	COLD TRANS	1.16	26.81	634.5	2.32	13.04						.246
					COLD STAB	.81	6.97	562.6	2.13	15.41						.232
IHC= 40 PPM/HEXANE					HOT TRANS	.78	11.02	533.2	1.93	16.05						1.675
ICO(ACT) .50 % CO					72 FTP	.98	16.47	597.0	2.04	14.17						.239
ICO(SPEC)= NONE % CO					75 FTP	.87	12.16	569.4	2.11	15.01						.629
OTHER TESTS: MODAL,HIGH,LOW					HFET	.33	5.09	482.2	2.25	18.07						
5028	75	FORD	TORI	351	COLD TRANS	1.61	15.28	831.3	4.08	10.31	.518	.222	.000	1.426	.434	.247
					COLD STAB	.87	6.31	757.9	2.16	11.51	.217	.115	.000	.966	.130	.218
IHC= 60 PPM/HEXANE					HOT TRANS	1.15	5.30	699.1	3.35	12.48	.111	.066	.000	.788	.139	.003
ICO(ACT) .05 % CO					72 FTP	1.23	10.61	793.0	2.73	10.90	.361	.166	.000	1.186	.276	.232
ICO(SPEC)= NONE % CO					75 FTP	1.10	7.88	756.9	2.88	11.48	.250	.124	.000	1.012	.195	.165
OTHER TESTS: MODAL,HIGH,LOW					HFET	.45	3.77	567.6	3.41	15.44						
5029	75	FORD	LTD	400	COLD TRANS	1.92	24.47	1,042.7	2.94	8.16	.261	.061	.000	.824	.509	.088
					COLD STAB	.53	6.53	1,011.3	2.20	8.67	.035	1.790	.000	.401	.143	.137
IHC= 350 PPM/HEXANE					HOT TRANS	.74	8.49	892.7	2.76	9.77	.000	.000	.000	.381	.000	.146
ICO(ACT) .10 % CO					72 FTP	1.19	15.12	1,026.3	2.47	8.42	.144	.962	.000	.604	.318	.113
ICO(SPEC)= NONE % CO					75 FTP	.87	10.76	985.4	2.50	8.83	.072	.945	.000	.482	.179	.129
OTHER TESTS: MODAL,HIGH,LOW					HFET	.31	4.05	672.7	2.73	13.05						
5030	75	MERC	MARQ	460	COLD TRANS	2.53	55.41	839.8	4.47	9.49	.880	.105	.000	1.181	.618	.211
					COLD STAB	1.26	44.76	833.6	2.20	9.77	.465	.063	.000	1.329	.271	.221
IHC= 850 PPM/HEXANE					HOT TRANS	2.21	33.16	725.7	4.22	11.31	.504	.083	.000	.896	.256	.207
ICO(ACT) 8.00 % CO					72 FTP	1.87	49.86	836.5	3.17	9.63	.664	.084	.000	1.258	.437	.216
ICO(SPEC)= NONE % CO					75 FTP	1.78	43.79	805.4	3.22	10.08	.561	.077	.000	1.181	.338	.215
OTHER TESTS: MODAL,HIGH,LOW					HFET	.54	14.73	574.0	3.94	14.82						

EXHAUST EMISSIONS REPORTED IN GRAMS PER MILE
FUEL ECONOMY IN MILES PER GALLON

APPENDIX C

LISTING OF FEDERAL TEST PROCEDURE RESULTS
ON INDIVIDUAL VEHICLES

WASHINGTON, D.C.

VEHICLE NUMBER	YEAR	MAKE	MODEL	CID	TEST TYPE	HC	CO	CO2	NOXC	FUEL ECONOMY	LIGHT HYDROCARBONS: METHANE (CH4)	ETHANE (C2H6)	PROPANE (C3H8)	BENZENE (C6H6)	ACETYLENE (C2H2)	ALIPHATIC ALDEHYDES (R-CHO)
5031	75	MERC	COUG	351	COLD TRANS	2.13	23.36	628.4	5.45	10.18	.504	.100	.000	1.038	.000	.262
					COLD STAB	2.70	5.45	806.7	3.33	10.77	.092	.043	.000	1.071	.000	.826
IHC= 25 PPM/HEXANE					HOT TRANS	1.95	3.78	794.2	4.64	11.00	.058	.030	.000	.000	.000	.284
ICO(ACT) .05 % CO					72 FTP	2.43	14.02	817.1	3.94	10.48	.289	.070	.000	1.056	.000	.556
ICO(SPEC)= NONE % CO					75 FTP	2.38	[illegible].68	807.8	4.12	10.70	.167	.051	.000	.772	.000	.562
OTHER TESTS: MODAL,HIGH,LOW					HFET	.36	2.56	614.1	4.19	14.33						
5032	75	OLDS	DELT	350	COLD TRANS	3.33	50.05	657.1	1.46	11.89	.883	.323	.000	2.785	.417	.172
					COLD STAB	.29	9.31	656.7	1.37	13.20	.317	.156	.000	.976	.000	2.197
IHC= 25 PPM/HEXANE					HOT TRANS	.66	27.46	617.1	1.54	13.40	.484	.020	.000	1.604	.000	2.560
ICO(ACT) .25 % CO					72 FTP	1.75	28.81	636.9	1.45	12.54	.588	.236	.000	1.842	.200	1.228
ICO(SPEC)= NONE % CO					75 FTP	1.02	22.64	645.9	1.43	12.96	.479	.153	.000	1.520	.086	1.880
OTHER TESTS: MODAL,HIGH,LOW					HFET	.12	9.94	521.2	1.43	16.52						
5033	75	OLDS	CUTL	350	COLD TRANS	2.86	37.02	618.1	1.93	12.95	.668	.289	.000	1.802	.359	.124
					COLD STAB	.19	.44	581.7	1.75	15.22	.035	2.046	.000	.000	.000	.054
IHC= 10 PPM/HEXANE					HOT TRANS	.36	2.66	554.0	2.11	15.87	.169	.158	.000	.000	.000	.040
ICO(ACT) .03 % CO					72 FTP	1.47	17.95	599.1	1.92	14.04	.338	1.205	.000	.862	.172	.088
ICO(SPEC)= NONE % CO					75 FTP	.79	8.57	581.6	1.88	14.[illegible]3	.202	1.169	.000	.370	.073	.064
OTHER TESTS: MODAL,HIGH,LOW					HFET	.08	.33	472.1	2.06	18.77						
5034	75	OLDS	CUST	455	COLD TRANS	1.68	13.99	806.5	5.43	10.64	.233	.097	.000	.818	.047	.117
					COLD STAB	.54	8.35	791.3	3.52	11.01	.196	.086	.000	.834	.000	2.501
IHC= 25 PPM/HEXANE					HOT TRANS	.43	7.49	694.5	5.02	12.54	.155	.066	.000	.880	.000	.034
ICO(ACT) .02 % CO					72 FTP	1.08	11.05	798.6	4.24	10.83	.214	.092	.000	.853	.022	1.360
ICO(SPEC)= NONE % CO					75 FTP	.74	9.28	768.0	4.32	11.30	.193	.083	.000	.870	.009	1.337
OTHER TESTS: MODAL,HIGH,LOW					HFET	.08	.68	572.8	5.23	15.46						
5035	75	PLYM	FURY	318	COLD TRANS	2.26	52.17	718.6	6.04	10.99	.593	.116	.000	.883	.197	.072
					COLD STAB	.10	.29	753.5	4.18	11.76	.058	.038	.000	.000	.383	.023
IHC= 60 PPM/HEXANE					HOT TRANS	.34	2.78	664.5	6.55	13.24	.105	.052	.000	.247	.623	.036
ICO(ACT) .05 % CO					72 FTP	1.14	25.12	736.8	5.31	11.38	.314	.076	.000	.422	.294	.045
ICO(SPEC)= .30 % CO					75 FTP	.61	11.65	722.0	5.21	11.95	.181	.058	.000	.249	.410	.036
OTHER TESTS: MODAL,HIGH,LOW					HFET	.09	.09	485.0	6.62	18.28						

EXHAUST EMISSIONS, REPORTED IN GRAMS PER MILE
FUEL ECONOMY IN MILES PER GALLON

APPENDIX C

LISTING OF FEDERAL TEST PROCEDURE RESULTS ON INDIVIDUAL VEHICLES

WASHINGTON, D.C.

VEHICLE NUMBER	YEAR	MAKE	MODEL	CID	TEST TYPE	HC	CO	CO2	NOXC	FUEL ECONOMY	LIGHT HYDROCARBONS METHANE (CH4)	ETHANE (C2H6)	PROPANE (C3H8)	BENZENE (C6H6)	ACETYLENE (C2H2)	ALIPHATIC ALDEHYDES (R-CHO)
5036	75	PLYM	VALI	225	COLD TRANS	4.22	41.24	471.5	5.06	16.14	.126	.582	.000	2.342	.000	.072
					COLD STAB	1.08	26.02	469.6	2.96	17.27	.836	.585	.000	2.554	.000	.030
IHC= 110 PPM/HEXANE					HOT TRANS	1.30	17.60	419.1	5.98	19.68	.000	.000	.000	2.228	.000	.031
ICO(ACT) 2.50 % CO					72 FTP	2.58	33.30	470.5	4.41	16.71	.496	.584	.000	2.453	.000	.050
ICO(SPEC)= .30 % CO					75 FTP	1.79	26.85	456.2	4.22	17.60	.462	.425	.000	2.422	.000	.039
OTHER TESTS: MODAL,HIGH,LOW					HFET	.17	1.30	336.9	7.80	26.14						
5037	75	PONT	GRAN	400	COLD TRANS	2.50	23.86	787.6	2.71	10.65	.479	.155	.000	1.543	.091	.179
					COLD STAB	.71	3.43	724.5	2.50	12.12	.145	.166	.000	.677	.130	.078
IHC= 46 PPM/HEXANE					HOT TRANS	1.19	6.70	661.4	2.93	13.13	.211	.100	.000	.632	.000	.094
ICO(ACT) .50 % CO					72 FTP	1.57	13.21	754.7	2.71	11.37	.305	.161	.000	1.092	.112	.126
ICO(SPEC)= NONE % CO					75 FTP	1.21	8.53	720.2	2.66	12.03	.232	.146	.000	.843	.086	.103
OTHER TESTS: MODAL,HIGH,LOW					HFET	.38	1.21	535.4	3.32	16.48						
5038	75	PONT	LEMA	350	COLD TRANS	.68	8.78	630.0	2.81	13.74						
					COLD STAB	.16	.52	619.0	2.09	14.31						
IHC= 110 PPM/HEXANE					HOT TRANS	.74	8.76	547.3	2.58	15.75						
ICO(ACT) 1.75 % CO					72 FTP	.41	4.48	624.3	2.33	14.03						
ICO(SPEC)= NONE % CO					75 FTP	.42	4.47	601.7	2.37	14.54						
OTHER TESTS: MODAL,HIGH,LOW					HFET	.11	1.33	414.7	2.03	21.28						
5039	75	PONT	GRAN	400	COLD TRANS	1.93	31.35	726.4	4.25	11.35	.339	.080	.000	.000	.000	.146
					COLD STAB	.79	10.25	701.7	3.30	12.32	.127	.051	.000	.000	.000	.074
IHC= 110 PPM/HEXANE					HOT TRANS	.91	18.62	618.4	4.48	13.64	.228	.058	.000	.000	.000	.056
ICO(ACT) 1.50 % CO					72 FTP	1.34	20.35	713.6	3.86	11.83	.229	.065	.000	.000	.000	.108
ICO(SPEC)= NONE % CO					75 FTP	1.06	16.88	684.1	3.81	12.43	.198	.059	.000	.000	.000	.084
OTHER TESTS: MODAL,HIGH,LOW					HFET	.13	1.41	489.9	3.95	18.02						
5040	76	MERC	CAPR	140	COLD TRANS	1.15	17.69	537.0	2.52	15.61	.097	1.949	.000	.359	.225	.131
					COLD STAB	.46	9.83	539.0	1.53	15.97	.030	1.278	.000	.475	.115	.146
IHC= 400 PPM/HEXANE					HOT TRANS	.33	6.11	457.0	2.25	18.98	.055	2.228	.000	.406	.197	.133
ICO(ACT) .10 % CO					72 FTP	.79	13.59	538.0	1.88	15.79	.062	1.600	.000	.420	.168	.139
ICO(SPEC)= NONE % CO					75 FTP	.56	10.43	516.2	1.93	16.61	.051	1.676	.000	.432	.160	.139
OTHER TESTS: MODAL,HIGH,LOW					HFET	.28	1.99	348.5	1.99	25.18						

EXHAUST EMISSIONS REPORTED IN GRAMS PER MILE
FUEL ECONOMY IN MILES PER GALLON

APPENDIX C

LISTING OF FEDERAL TEST PROCEDURE RESULTS ON INDIVIDUAL VEHICLES

WASHINGTON, D.C.

VEHICLE NUMBER	YEAR	MAKE	MODEL	CID	TEST TYPE	HC	CO	CO2	NOXC	FUEL ECONOMY	LIGHT HYDROCARBONS: METHANE (CH4)	ETHANE (C2H6)	PROPANE (C3H8)	BENZENE (C6H6)	ACETYLENE (C2H2)	ALIPHATIC ALDEHYDES (R-CHO)
5041	75	DATS	B210	085	COLD TRANS	1.72	17.75	358.3	5.01	22.66	.002	.036	.000	2.225	.259	.296
					COLD STAB	1.14	6.69	357.4	2.09	23.90	.048	.023	.000	1.654	.153	.262
IHC= 75 PPM/HEXANE					HOT TRANS	1.43	8.93	311.5	4.59	26.90	.091	.025	.000	1.791	.181	.195
ICO(ACT) .25 % CO					72 FTP	1.42	11.98	357.9	3.29	23.28	.026	.029	.000	1.928	.204	.278
ICO(SPEC)= 2.00 % CO					75 FTP	1.34	9.57	345.1	3.37	24.35	.050	.026	.000	1.809	.182	.250
OTHER TESTS: MODAL,HIGH,LOW					HFET	1.15	2.59	263.4	6.73	32.73						
5042	75	HOND	CIVI	091	COLD TRANS	1.80	13.92	337.2	2.55	24.34	.328	.147	.000	.643	.529	.104
					COLD STAB	.46	4.58	350.0	1.97	24.76	1.790	.000	.000	.000	.000	.081
IHC= 100 PPM/HEXANE					HOT TRANS	.70	3.58	302.5	2.87	28.63	.000	.000	.000	.000	.000	.062
ICO(ACT) .25 % CO					72 FTP	1.10	9.05	343.9	2.40	24.54	1.090	.070	.000	.308	.253	.092
ICO(SPEC)= NONE % CO					75 FTP	.80	6.23	334.4	2.33	25.59	1.000	.030	.000	.132	.108	.080
OTHER TESTS: MODAL,HIGH,LOW					HFET	.06	1.50	243.4	3.06	36.08						
5043	75	TOYO	CORO	097	COLD TRANS	2.88	18.81	361.9	5.12	22.17						
					COLD STAB	1.34	12.14	377.1	1.83	22.17						
IHC= 40 PPM/HEXANE					HOT TRANS	1.96	8.52	318.7	4.31	26.23						
ICO(ACT) .50 % CO					72 FTP	2.08	15.34	369.8	3.02	22.16						
ICO(SPEC)= NONE % CO					75 FTP	1.82	12.53	358.0	3.18	23.14						
OTHER TESTS: MODAL,HIGH,LOW					HFET	.86	4.47	253.0	4.11	33.78						
5044	75	VOLK	DASH	090	COLD TRANS	1.96	25.94	476.5	1.04	16.96	.000	.000	.000	.000	.000	.061
					COLD STAB	.22	.72	487.0	.56	18.16	.242	.043	.000	.000	.000	.034
IHC= 20 PPM/HEXANE					HOT TRANS	.27	1.03	407.5	1.00	21.65	.281	.050	.000	.000	.000	.038
ICO(ACT) .03 % CO					72 FTP	1.05	12.80	481.9	.77	17.56	.126	.022	.000	.000	.000	.047
ICO(SPEC)= 2.00 % CO					75 FTP	.59	6.00	463.1	.78	18.71	.203	.036	.000	.000	.000	.040
OTHER TESTS: MODAL,HIGH,LOW					HFET	.10	1.20	320.2	.95	27.52						
5045	75	VOLK	RABB	090	COLD TRANS	6.67	79.77	339.0	3.19	18.28	.162	.122	.000	2.785	2.785	.189
					COLD STAB	5.78	30.44	332.1	1.99	22.30	.120	.043	.000	2.158	.168	.335
IHC= 250 PPM/HEXANE					HOT TRANS	3.73	30.77	302.4	3.10	24.49	.214	.050	.000	1.136	.275	.223
ICO(ACT) .35 % CO					72 FTP	6.21	54.05	335.4	2.52	20.17	.140	.081	.000	2.458	1.421	.265
ICO(SPEC)= 2.00 % CO					75 FTP	5.40	40.68	325.4	2.54	21.83	.154	.061	.000	2.008	.736	.274
OTHER TESTS: MODAL,HIGH,LOW					HFET	1.29	25.91	274.4	3.60	27.81						

EXHAUST EMISSIONS REPORTED IN GRAMS PER MILE
FUEL ECONOMY IN MILES PER GALLON

APPENDIX C

LISTING OF FEDERAL TEST PROCEDURE RESULTS ON INDIVIDUAL VEHICLES

WASHINGTON, D.C.

VEHICLE NUMBER	YEAR	MAKE	MODEL	CID	TEST TYPE	HC	CO	CO2	NOXC	FUEL ECONOMY	LIGHT HYDROCARBONS: METHANE (CH4)	ETHANE (C2H6)	PROPANE (C3H8)	BENZENE (C6H6)	ACETYLENE (C2H2)	ALIPHATIC ALDEHYDES (R-CHO)
6001	75	CHEV	CUST	250	COLD TRANS	1.74	21.50	619.4	3.00	13.48	.027	.069	.000	.000	.000	.117
					COLD STAB	.16	1.98	618.5	1.70	14.27	.066	.030	.000	.000	.000	.032
IHC= 12 PPM/HEXANE					HOT TRANS	.51	8.03	564.0	2.30	15.35	.139	.038	.000	.000	.000	.027
ICO(ACT) .03 % CO					72 FTP	.91	11.32	618.9	1.99	13.87	.048	.049	.000	.000	.000	.073
ICO(SPEC)= NONE % CO					75 FTP	.58	7.65	603.8	2.13	14.37	.078	.040	.000	.000	.000	.048
OTHER TESTS: MODAL					HFET	.02	.17	477.6	2.68	18.57						
6002	75	CHEV	CUST	350	COLD TRANS	1.20	7.60	739.6	4.37	11.75	.125	.058	.000	.665	.064	.017
					COLD STAB	.10	.42	669.5	1.78	13.24	.053	.035	.000	.000	.000	.035
IHC= 18 PPM/HEXANE					HOT TRANS	.18	.56	623.0	3.59	14.22	.058	.033	.000	.000	.000	.038
ICO(ACT) .02 % CO					72 FTP	.63	3.86	703.1	2.65	12.48	.088	.046	.000	.318	.030	.026
ICO(SPEC)= NONE % CO					75 FTP	.35	1.93	671.2	2.81	13.14	.069	.039	.000	.136	.013	.032
OTHER TESTS: MODAL					HFET	.03	.04	548.9	3.86	16.16						
6003	75	CHEV	CUST	350	COLD TRANS	1.27	17.57	710.2	8.44	11.97	.320	.250	.000	.000	.000	.466
					COLD STAB	.20	.44	[illegible]	4.20	13.40	.158	.143	.000	.000	.000	.251
IHC= 20 PPM/HEXANE					HOT TRANS	.40	1.08	618.2	7.04	14.29	.183	.167	.000	.000	.000	.233
ICO(ACT) .03 % CO					72 FTP	.71	8.64	684.6	5.56	12.67	.236	.194	.000	.000	.000	.354
ICO(SPEC)= NONE % CO					75 FTP	.47	4.14	659.5	5.85	13.29	.198	.171	.000	.000	.000	.290
OTHER TESTS: MODAL					HFET	.12	.86	523.4	6.07	16.90						
6004	75	CHEV	SCUT	350	COLD TRANS	1.66	21.31	756.1	[illegible]	11.16	.298	.086	.000	.000	.000	.098
					COLD STAB	.10	.84	714.5	2.50	12.39	.089	.038	.000	.000	.000	.030
IHC= 30 PPM/HEXANE					HOT TRANS	.19	.72	644.7	1.69	13.73	.128	.050	.000	.000	.000	.023
ICO(ACT) .0[illegible] % CO					72 FTP	.84	10.64	734.4	2.11	11.77	.189	.061	.000	.000	.000	.063
ICO(SPEC)= NONE % CO					75 FTP	.44	5.02	704.0	2.76	12.44	.142	.051	.000	.000	.000	.042
OTHER TESTS: MODAL					HFET	.04	.07	[illegible]	4.16	16.45						
6005	75	DODG	D100	318	COLD TRANS	3.81	49.91	723.2	4.97	10.90	.713	.161	.000	2.267	1.498	.245
					COLD STAB	2.78	29.75	639.7	3.96	12.76	.230	.092	.000	1.419	.611	.274
IHC= 150 PPM/HEXANE					HOT TRANS	2.40	16.45	608.6	5.72	13.82	.200	.083	.000	1.005	.735	.230
ICO(ACT) 2.40 % CO					72 FTP	3.27	39.40	679.6	4.81	11.80	.461	.125	.000	1.825	1.036	.260
ICO(SPEC)= NONE % CO					75 FTP	2.89	30.27	648.4	4.65	12.58	.321	.104	.000	1.480	.827	.256
OTHER TESTS: MODAL					HFET	1.49	5.78	509.9	6.04	16.95						

EXHAUST EMISSIONS REPORTED IN GRAMS PER MILE
FUEL ECONOMY IN MILES PER GALLON

APPENDIX C

LISTING OF FEDERAL TEST PROCEDURE RESULTS
ON INDIVIDUAL VEHICLES

WASHINGTON, D.C.

VEHICLE NUMBER	YEAR	MAKE	MODEL	CID	TEST TYPE	HC	CO	CO2	NOXC	FUEL ECONOMY	LIGHT HYDROCARBONS: METHANE (CH4)	ETHANE (C2H6)	PROPANE (C3H8)	BENZENE (C6H6)	ACETYLENE (C2H2)	ALIPHATIC ALDEHYDES (R-CHO)
6006	75	FORD	ECON	300	COLD TRANS	1.02	20.31	598.5	2.73	14.01	.030	.004	.000	.069	.006	.015
IHC= 18 PPM/HEXANE					COLD STAB	.37	4.46	580.3	2.10	15.08	.117	.030	.000	.360	.000	.110
ICO(ACT) .03 % CO					HOT TRANS	.92	13.76	488.8	2.28	17.29	.181	.038	.000	.523	.000	.016
ICO(SPEC)= NONE % CO					72 FTP	.68	12.05	589.0	2.19	14.54	.076	.018	.000	.221	.003	.065
OTHER TESTS: MODAL					75 FTP	.65	10.26	559.1	2.28	15.37	.116	.027	.000	.345	.001	.065
					HFET	.17	1.39	443.8	3.06	19.88						
6007	75	FORD	CUST	302	COLD TRANS	1.15	13.22	724.7	5.01	11.85	.506	.077	.000	.509	.047	.111
IHC= 40 PPM/HEXANE					COLD STAB	.29	.25	682.3	2.79	12.98	.227	.040	.000	.000	.000	.056
ICO(ACT) .10 % CO					HOT TRANS	.43	1.04	614.7	5.31	14.37	.161	.036	.000	.272	.000	.059
ICO(SPEC)= NONE % CO					72 FTP	.70	6.46	702.6	4.00	12.41	.361	.058	.000	.244	.022	.032
OTHER TESTS: MODAL					75 FTP	.50	3.13	672.6	3.93	13.07	.266	.047	.000	.179	.009	.068
					HFET	.16	.61	538.6	6.16	16.43						
6008	75	FORD	CLUB	351	COLD TRANS	4.52	40.83	839.4	5.32	9.67	.707	.214	.000	2.568	1.064	.313
IHC= 100 PPM/HEXANE					COLD STAB	2.69	5.83	787.6	3.39	11.02	.097	.081	.000	1.549	.327	.532
ICO(ACT) .10 % CO					HOT TRANS	2.84	8.97	743.5	5.19	11.58	.136	.089	.000	1.518	.729	.369
ICO(SPEC)= NONE % CO					72 FTP	3.57	22.58	812.4	4.25	10.33	.389	.145	.000	2.037	.680	.427
OTHER TESTS: MODAL					75 FTP	3.11	13.89	786.2	4.28	10.85	.233	.111	.000	1.750	.588	.442
					HFET	1.19	4.49	590.2	3.69	14.77						
6009	75	FORD	ECON	351	COLD TRANS	4.97	55.86	720.3	5.51	10.77	.832	.247	.000	2.785	.933	.387
IHC= 170 PPM/HEXANE					COLD STAB	3.52	96.48	617.8	3.53	11.37	.245	.158	.000	2.092	.381	.451
ICO(ACT) .17 % CO					HOT TRANS	3.17	14.61	574.4	1.96	14.61	.311	.150	.000	1.910	.612	.404
ICO(SPEC)= NONE % CO					72 FTP	4.21	77.04	666.9	2.78	11.07	.526	.201	.000	2.423	.645	.421
OTHER TESTS: MODAL					75 FTP	3.72	65.78	627.0	3.51	11.95	.384	.174	.000	2.185	.557	.425
					HFET	1.85	6.24	526.3	5.55	16.37						
6010	75	GMC	VAND	350	COLD TRANS	4.55	47.08	647.1	6.36	12.07	.779	.245	.000	.000	.559	.344
IHC= 165 PPM/HEXANE					COLD STAB	4.32	19.21	590.6	3.52	13.99	.304	.150	.000	.000	.235	.441
ICO(ACT) 1.10 % CO					HOT TRANS	3.69	10.28	563.2	5.90	15.02	.239	.097	.000	.000	.253	.433
ICO(SPEC)= NONE % CO					72 FTP	4.43	32.55	617.7	4.66	12.99	.532	.196	.000	.000	.390	.395
OTHER TESTS: MODAL					75 FTP	4.20	22.51	594.8	4.75	13.79	.384	.155	.000	.000	.306	.419
					HFET	1.52	4.97	504.2	5.36	17.17						

EXHAUST EMISSIONS REPORTED IN GRAMS PER MILE
FUEL ECONOMY IN MILES PER GALLON

LISTING OF HIGHWAY FUEL ECONOMY AND EMISSION RESULTS ON INDIVIDUAL VEHICLES

WASHINGTON, D.C.

VEHICLE	YEAR	MAKE	MODEL	CID	HC	CO	CO2	NOXC	MPG
5011	75	AMC	HORN	258	2.78	3.45	414.1	3.06	20.72
5012	75	BUIC	SKYL	231	.24	1.58	395.7	8.11	22.25
5013	75	BUIC	ELEC	455	.24	5.64	575.4	2.29	15.17
5014	75	BUIC	ELEC	455	.24	3.82	580.5	2.54	15.11
5015	75	CADI	DEVI	500	.55	34.56	614.9	1.76	13.23
5016	75	CHEV	VEGA	140	.17	2.20	389.6	1.45	22.55
5017	75	CHEV	CAMA	250	.08	1.37	400.6	2.20	22.03
5018	75	CHEV	MONT	350	.11	3.34	502.4	4.24	17.47
5019	75	CHEV	IMPA	350	.25	17.31	561.8	1.15	15.05
5020	75	CHEV	IMPA	350	.04	.62	520.6	3.32	17.01
5021	75	CHEV	CAPR	400	.08	.07	591.0	6.47	15.01
5022	75	CHRY	NEWY	440	.02	.54	612.7	3.84	14.46
5023	75	DODG	CHAR	360	.15	.90	507.7	5.25	17.42
5024	75	DODG	DART	225	.43	8.17	347.1	8.12	24.56
5025	75	FORD	MUST	140	.26	2.35	392.5	1.78	22.36
5026	75	FORD	TORI	351	.30	1.62	535.7	2.80	16.46
5027	75	FORD	MAVE	250	.33	5.09	482.2	2.25	18.07
5028	75	FORD	TORI	351	.45	3.77	567.6	3.41	15.44
5629	75	FORD	LTD	400	.31	4.05	672.7	2.73	13.05
5030	75	MERC	MARQ	460	.54	14.73	574.0	3.94	14.82
5031	75	MERC	COUG	351	.36	2.56	614.1	4.19	14.33
5032	75	OLDS	DELT	350	.12	9.94	521.2	1.43	16.52
5033	75	OLDS	CUTL	350	.08	.33	472.1	2.06	18.77
5034	75	OLDS	CUST	455	.08	.68	572.8	5.23	15.46

EMISSION RESULTS IN GRAMS PER MILE.
FUEL ECONOMY IN MILES PER GALLON

LISTING OF HIGHWAY FUEL ECONOMY AND EMISSION
RESULTS ON INDIVIDUAL VEHICLES

WASHINGTON, D.C.

VEHICLE	YEAR	MAKE	MODEL	CID	HC	CO	CO2	NOXC	MPG
5035	75	PLYM	FURY	318	.09	.09	485.0	6.62	18.28
5036	75	PLYM	VALI	225	.17	1.30	336.9	7.80	26.14
5037	75	PONT	GRAN	400	.38	1.21	535.4	3.32	16.48
5038	75	PONT	LEMA	350	.11	1.33	414.7	2.03	21.28
5039	75	PONT	GRAN	400	.13	1.41	489.9	3.95	18.02
5040	76	MERC	CAPR	140	.28	1.99	348.5	1.99	25.18
5041	75	DATS	B210	085	1.15	2.59	263.4	6.73	32.73
5042	75	HOND	CIVI	091	.06	1.50	243.4	3.06	36.08
5043	75	TOYO	CORO	097	.86	4.47	253.0	4.11	33.78
5044	75	VOLK	DASH	090	.10	1.20	320.2	.95	27.52
5045	75	VOLK	RABB	090	1.29	25.91	274.4	3.60	27.81
6001	75	CHEV	CUST	250	.02	.17	477.6	2.68	18.57
6002	75	CHEV	CUST	350	.03	.04	548.9	3.86	16.16
6003	75	CHEV	CUST	350	.12	.86	523.4	6.07	16.90
6004	75	CHEV	SCOT	350	.04	.07	539.4	4.16	16.45
6005	75	DODG	D100	318	1.49	5.78	509.9	6.04	16.95
6006	75	FORD	ECON	300	.17	1.39	443.8	3.06	19.88
6007	75	FORD	CUST	302	.16	.61	538.6	6.16	16.43
6008	75	FORD	CLUB	351	1.19	4.49	590.2	3.69	14.77
6009	75	FORD	ECON	351	1.85	6.24	526.3	5.55	16.37
6010	75	GMC	VAND	350	1.52	4.97	504.2	5.36	17.17

EMISSION RESULTS IN GRAMS PER MILE.
FUEL ECONOMY IN MILES PER GALLON

APPENDIX E

LISTING OF MODAL RESULTS ON INDIVIDUAL VEHICLES
WASHINGTON, D.C.

VEHICLE	YEAR	MAKE	MODEL	CID
5011	75	AMC	HORN	258

MODE NO	HC	CO	CO2	NOX	MPG
01	.35	3.80	76.1	.13	106.74
02	2.66	16.35	1,012.9	9.55	8.47
03	.72	1.73	506.9	2.26	17.33
04	.83	12.18	310.0	.73	24.75
05	.30	2.77	82.4	.15	101.29
06	3.51	18.35	838.0	11.32	10.10
07	1.11	5.07	530.5	1.33	16.37
08	1.49	8.80	559.3	8.06	15.36
09	.70	2.53	532.6	2.30	16.47
10	.89	4.14	485.7	7.69	17.93
11	.66	4.59	544.8	2.35	16.01
12	.48	4.89	299.1	3.80	28.79
13	1.23	4.52	277.9	2.30	30.72
14	2.20	41.02	655.3	11.18	12.21
15	1.31	9.99	606.2	4.82	14.17
16	.36	4.92	295.4	2.16	29.17
17	2.17	5.44	303.8	1.48	27.80
18	.85	12.81	631.7	10.60	13.56
19	.46	5.62	559.6	4.36	15.57
20	1.70	7.14	347.9	.91	24.35
21	2.56	12.97	264.6	.74	30.28
22	1.36	34.96	782.6	14.62	10.54
23	.45	2.88	557.1	4.18	15.76
24	2.32	8.48	404.2	1.48	20.89
25	.40	3.52	81.1	.15	101.00
26	1.26	17.16	826.5	14.94	10.35
27	.44	2.85	579.6	4.36	15.15
28	2.01	5.94	344.2	1.42	24.66
29	1.01	3.96	232.5	1.78	36.69
30	.67	6.95	363.2	1.34	23.59
31	1.29	13.20	364.6	.81	22.79
32	2.31	19.81	712.2	1.27	11.82
(BAG)	1.22	12.47	515.9	4.36	16.46
(CALC)	1.32	10.63	526.7	5.48	16.20
66	.26	1.17	67.6	.12	126.39
67	2.46	11.64	820.2	1.15	10.48
68	1.07	6.54	477.5	.74	18.07
69	.50	1.94	368.9	.77	23.76
70	.47	1.52	286.1	1.92	30.61
71	.54	2.25	358.8	.97	24.38
72	.29	2.38	443.9	3.38	19.78

MODE NO	HC	CO	CO2	NOX	MPG
33	.34	3.30	78.6	.15	104.66
34	1.56	8.51	878.9	11.60	9.89
35	.67	2.75	458.2	1.24	19.10
36	1.12	7.29	326.8	.49	25.97
37	1.29	11.29	364.6	.88	22.97
38	1.33	10.38	700.1	13.48	12.31
39	.76	2.49	544.8	1.48	16.10
40	1.23	9.03	383.5	.67	22.10
41	.34	3.24	82.4	.15	100.28
42	2.05	57.14	930.9	15.15	8.64
43	.65	4.50	566.3	4.36	15.42
44	2.25	7.38	336.0	1.15	25.02
45	.51	2.30	78.6	.15	105.94
46	2.44	13.09	557.1	9.44	15.16
47	.72	2.13	417.4	2.08	20.98
48	.99	9.75	607.5	10.61	14.18
49	.52	4.50	562.3	4.36	15.54
50	1.73	5.72	321.9	1.18	26.39
51	2.19	4.63	257.8	1.89	32.63
52	.91	10.39	436.4	.76	19.48
53	.33	3.30	78.6	.15	104.71
54	1.05	7.91	536.7	12.02	16.06
55	.46	2.82	521.3	4.45	16.83
56	1.75	6.04	369.7	.72	23.07
57	.35	3.16	77.4	.15	106.36
58	1.92	9.37	836.5	8.17	10.35
59	.72	1.90	397.1	2.04	22.06
60	2.12	19.45	523.9	12.50	15.81
61	.99	4.78	586.3	5.01	14.86
62	1.34	5.97	339.4	1.19	25.14
63	1.65	5.42	232.5	1.93	36.05
64	.88	8.48	448.5	1.22	19.10
65	.32	3.19	79.9	.15	103.37

EMISSION RESULTS IN GRAMS PER MILE (PER MINUTE FOR IDLE).
FUEL ECONOMY IN MILES PER GALLON (MINUTES PER GALLON FOR IDLE)

APPENDIX E

LISTING OF MODAL RESULTS ON INDIVIDUAL VEHICLES
WASHINGTON, D.C.

VEHICLE	YEAR	MAKE	MODEL	CID
5012	75	BUIC	SKYL	231

MODE NO	HC	CO	CO2	NOX	MPG
01	.06	.67	123.9	.52	70.95
02	1.02	11.15	1,263.3	30.67	6.91
03	.11	1.51	291.9	4.19	30.13
04	.11	2.40	365.0	1.58	24.04
05	.05	.86	99.3	.45	88.10
06	.76	7.99	1,068.3	20.57	8.19
07	.18	5.95	434.9	2.71	19.95
08	.62	5.42	763.7	20.02	11.46
09	.15	2.00	314.0	3.59	27.95
10	.60	6.56	677.1	19.07	12.87
11	.20	2.19	339.4	9.52	25.84
12	.05	3.43	180.1	2.36	47.81
13	.14	1.69	299.8	2.22	29.30
14	3.39	210.68	760.8	10.04	8.04
15	.53	14.44	452.2	13.59	18.62
16	.24	7.51	205.2	4.31	40.77
17	.20	3.61	314.2	6.86	27.69
18	.96	38.99	684.6	16.02	11.85
19	.30	4.98	435.4	14.73	19.98
20	.12	4.93	223.4	3.67	38.34
21	.17	4.28	478.6	2.17	18.27
22	1.28	60.00	842.6	16.91	9.43
23	.25	4.20	432.6	14.54	20.17
24	.15	6.68	227.2	2.86	37.27
25	.02	.87	109.7	.72	79.91
26	1.08	48.13	893.8	19.91	9.12
27	.22	3.22	434.5	15.00	20.16
28	.10	5.50	207.1	3.32	41.09
29	.05	3.49	282.2	3.04	30.83
30	.01	3.39	278.4	1.18	31.28
31	.02	4.16	431.3	1.94	20.27
32	.04	8.10	824.2	3.96	10.60
(BAG)	.66	33.22	486.6	8.65	16.41
(CALC)	.68	33.54	492.9	8.97	16.20
66	.08	.13	96.7	.41	91.43
67	2.23	6.08	1,193.8	4.28	7.33
68	1.35	5.40	588.9	1.07	14.75
69	1.10	3.61	388.0	1.00	22.35
70	.58	.92	284.9	2.39	30.80
71	.26	.97	325.5	8.17	27.07
72	.22	2.01	436.2	12.24	20.16

MODE NO	HC	CO	CO2	NOX	MPG
33	.01	1.05	108.2	.70	80.82
34	.70	27.62	923.8	17.62	9.15
35	.11	3.23	323.5	7.18	26.98
36	.14	10.05	205.2	1.67	40.08
37	.12	13.08	445.8	.84	19.01
38	.83	36.64	884.7	16.08	9.39
39	.16	7.16	332.3	7.57	25.80
40	.25	16.25	261.6	1.47	30.83
41	.06	5.12	112.5	.34	73.53
42	3.51	230.53	881.7	9.94	7.07
43	.45	17.84	423.1	9.46	19.61
44	.34	17.32	235.4	1.80	33.66
45	.08	6.13	103.4	.33	78.41
46	.81	37.11	1,001.0	18.98	8.35
47	.33	14.98	308.2	2.44	26.67
48	1.05	45.73	708.3	13.89	11.32
49	.29	12.55	440.1	9.79	19.26
50	.29	14.97	188.8	2.07	41.62
51	.40	16.19	293.3	2.98	27.73
52	.79	26.50	386.9	1.77	20.59
53	.32	7.44	101.8	.52	77.53
54	1.00	44.78	783.8	15.04	10.35
55	.28	13.94	433.1	9.51	19.46
56	.42	18.74	247.1	2.22	31.94
57	.30	7.89	105.5	.64	74.71
58	1.19	47.03	896.9	15.16	9.10
59	.47	15.96	301.7	2.35	27.04
60	2.58	183.94	680.9	8.09	9.07
61	.64	33.82	413.5	8.45	18.94
62	.42	21.24	180.5	1.92	41.24
63	.48	18.98	261.0	1.09	30.36
64	1.03	34.45	376.8	.99	20.44
65	.31	8.92	102.8	.51	75.38

EMISSION RESULTS IN GRAMS PER MILE (PER MINUTE FOR IDLE).
FUEL ECONOMY IN MILES PER GALLON (MINUTES PER GALLON FOR IDLE)

APPENDIX E

LISTING OF MODAL RESULTS ON INDIVIDUAL VEHICLES
WASHINGTON, D.C.

VEHICLE	YEAR	MAKE	MODEL	CID
5013	75	BUIC	ELEC	455

MODE NO	HC	CO	CO2	NOX	MPG	MODE NO	HC	CO	CO2	NOX	MPG
01	.58	12.17	120.1	.07	62.93	33	.55	20.15	128.9	.09	54.70
02	4.31	102.05	1,821.1	12.51	4.44	34	2.03	64.03	1,197.5	6.97	6.80
03	1.73	46.38	400.9	.80	18.52	35	1.16	36.16	500.3	4.46	15.82
04	2.42	57.11	481.7	.38	15.32	36	1.56	39.19	323.7	.62	22.74
05	.51	12.48	120.1	.07	62.82	37	2.20	87.91	515.4	.35	13.43
06	6.45	215.66	1,539.6	2.53	4.67	38	1.75	60.31	1,218.7	6.42	6.72
07	2.48	74.51	550.4	.35	13.14	39	1.21	42.15	488.3	1.17	15.89
08	17.05	85.32	1,076.5	5.34	7.01	40	2.21	41.52	379.8	.34	19.63
09	1.71	39.70	438.9	.91	17.51	41	.59	19.85	128.9	.07	54.81
10	1.63	23.81	925.7	7.37	9.16	42	2.44	98.98	1,423.1	10.04	5.59
11	1.02	20.34	548.5	1.19	15.20	43	1.00	31.02	614.1	4.59	13.32
12	1.66	17.24	211.1	.25	36.46	44	1.74	29.75	344.0	.67	22.39
13	1.72	37.87	250.2	.58	28.16	45	.55	22.89	127.6	.09	53.71
14	2.38	83.35	1,150.7	9.43	6.88	46	4.39	145.47	1,474.4	6.72	5.16
15	1.12	26.21	694.1	4.44	12.01	47	1.75	63.83	406.0	.65	17.34
16	.92	12.74	416.3	.83	20.21	48	1.38	32.84	1,030.6	7.06	8.16
17	1.35	25.65	442.1	.48	18.23	49	.96	27.72	636.6	3.91	12.99
18	.46	8.21	1,019.2	10.87	8.58	50	1.16	22.88	328.7	.60	24.09
19	.39	15.87	659.2	3.95	12.95	51	1.78	66.23	358.2	.50	18.96
20	1.21	17.15	316.5	.59	25.56	52	2.60	92.73	507.2	.60	13.42
21	2.31	68.39	535.4	.49	13.65	53	.58	25.01	125.1	.07	53.40
22	.87	33.30	1,271.9	9.01	6.68	54	1.41	44.26	1,235.3	8.24	6.77
23	.35	14.64	654.0	4.08	13.08	55	.83	27.42	610.1	4.08	13.53
24	1.68	21.59	461.3	.58	17.73	56	.20	37.86	348.4	.64	21.72
25	.49	15.87	121.4	.09	60.03	57	.59	26.82	125.1	.07	52.49
26	.95	29.99	1,325.0	10.80	6.45	58	4.45	158.15	1,357.9	5.27	5.47
27	.45	16.18	634.0	4.11	13.43	59	1.98	52.43	413.6	.65	17.67
28	1.41	16.37	362.3	.61	22.61	60	1.53	42.17	1,258.6	8.71	6.67
29	1.61	52.43	368.2	.69	19.47	61	1.10	40.23	587.6	3.89	13.56
30	1.70	54.58	350.0	.56	20.11	62	2.40	25.54	298.7	.42	25.62
31	2.31	87.91	525.4	.42	20.11	63	1.92	75.73	350.5	.50	18.66
32	4.53	155.32	1,002.7	.67	7.03	64	2.44	92.63	471.6	.32	14.20
						65	.60	27.12	125.1	.07	52.34
(BAG)	1.47	38.26	697.3	3.47	11.65						
(CALC)	1.70	43.97	726.5	3.85	11.08						
66	.54	11.22	119.5	.07	63.94						
67	4.31	55.83	1,488.9	.65	5.58						
68	1.48	12.80	747.4	.32	11.49						
69	2.09	48.82	567.3	.36	13.64						
70	1.66	37.12	378.0	.97	20.10						
71	.66	23.38	499.1	.67	16.49						
72	.57	24.32	574.2	3.70	14.45						

EMISSION RESULTS IN GRAMS PER MILE (PER MINUTE FOR IDLE).
FUEL ECONOMY IN MILES PER GALLON (MINUTES PER GALLON FOR IDLE)

APPENDIX E

LISTING OF MODAL RESULTS ON INDIVIDUAL VEHICLES
WASHINGTON, D.C.

VEHICLE	YEAR	MAKE	MODEL	CID
5014	75	BUIC	ELEC	455

MODE NO	HC	CO	CO2	NOX	MPG
01	.41	4.44	132.9	.07	62.88
02	4.90	71.85	1,830.2	14.62	4.53
03	1.53	28.06	448.4	.77	17.84
04	1.47	24.97	514.2	.66	15.90
05	.44	6.00	132.9	.07	61.76
06	6.21	105.24	1,096.6	2.42	6.92
07	2.05	38.91	621.4	.29	12.88
08	2.72	39.67	1,263.6	6.36	6.65
09	1.16	22.34	491.3	.66	16.73
10	1.41	16.97	940.2	10.33	9.13
11	.41	3.83	551.6	1.10	15.88
12	.58	3.54	320.0	.46	27.03
13	13.93	15.12	398.2	.62	19.04
14	1.70	45.13	1,197.5	1.77	6.96
15	.94	9.11	649.5	3.69	13.31
16	.64	2.62	372.6	.87	23.43
17	.82	9.25	459.4	.66	18.62
18	.29	2.57	1,012.2	14.85	8.72
19	.17	.76	642.8	2.57	13.78
20	.77	4.74	398.5	.62	21.73
21	1.40	21.52	581.5	.44	14.32
22	.80	16.85	1,321.6	19.48	6.57
23	.15	2.56	656.1	3.31	13.43
24	1.18	7.33	420.1	.62	20.38
25	.40	6.00	130.5	.16	62.88
26	.88	10.67	1,315.9	22.78	6.64
27	.17	1.93	642.8	3.74	13.73
28	1.01	4.49	343.6	.65	25.08
29	1.27	30.51	400.7	.73	19.60
30	1.18	35.56	357.3	.24	21.28
31	1.80	43.84	521.8	.29	14.88
32	3.47	79.72	948.0	.56	8.18
(BAG)	1.25	24.33	688.4	5.34	12.15
(CALC)	1.33	25.95	728.9	5.88	11.46
66	.63	16.50	110.3	.05	64.23
67	6.98	144.27	1,357.6	.64	5.52
68	3.63	71.23	683.0	.32	11.00
69	2.41	64.76	529.7	.29	13.88
70	1.55	29.65	382.9	1.07	20.43
71	.53	14.64	488.0	.68	17.31
72	.49	13.41	563.7	3.22	14.93

MODE NO	HC	CO	CO2	NOX	MPG
33	.48	12.19	124.2	.07	61.29
34	2.40	54.47	1,279.5	11.42	6.46
35	1.23	29.24	493.5	.90	16.33
36	1.32	19.23	335.8	.21	23.97
37	3.77	40.14	556.6	.29	14.05
38	2.18	47.78	1,189.6	13.44	6.98
39	1.04	25.21	490.1	1.10	16.65
40	1.77	22.12	407.5	.31	19.82
41	.45	9.11	126.7	.09	62.35
42	1.87	50.38	1,424.2	17.34	5.88
43	.57	17.69	604.6	3.71	13.99
44	1.47	16.14	408.4	.58	20.24
45	.46	11.58	123.0	.09	62.25
46	4.58	108.84	1,277.1	43.85	6.06
47	1.60	49.87	410.7	.62	17.96
48	1.41	23.12	996.6	16.31	8.55
49	.54	16.47	632.2	3.62	13.45
50	1.60	18.60	360.1	.46	22.50
51	1.31	43.26	353.2	.66	20.86
52	2.20	62.98	489.7	.62	14.90
53	.53	24.63	119.3	.07	55.61
54	1.50	39.39	1,061.6	14.54	7.86
55	.57	17.08	656.1	3.96	12.96
56	1.47	22.68	408.3	.42	19.78
57	.51	14.34	120.5	.09	61.37
58	4.66	136.59	1,158.0	5.81	6.39
59	1.62	53.46	423.3	.84	17.32
60	1.49	27.90	1,137.7	15.79	7.48
61	.98	27.92	602.0	4.04	13.67
62	1.65	19.63	358.4	.26	22.50
63	1.54	49.27	360.6	.62	20.04
64	2.03	61.41	441.1	.53	16.31
65	.57	18.30	118.0	.07	59.75

EMISSION RESULTS IN GRAMS PER MILE (PER MINUTE FOR IDLE).
FUEL ECONOMY IN MILES PER GALLON (MINUTES PER GALLON FOR IDLE)

APPENDIX E

LISTING OF MODAL RESULTS ON INDIVIDUAL VEHICLES
WASHINGTON, D.C.

VEHICLE	YEAR	MAKE	MODEL	CID
5015	75	CADI	DEVI	500

MODE NO	HC	CO	CO2	NOX	MPG
01	.01	.54	118.2	.35	74.57
02	3.54	178.35	1,508.1	7.97	4.93
03	.18	3.33	522.9	2.06	16.78
04	.15	.96	506.9	1.32	17.44
05	.03	.27	118.2	.33	74.80
06	.70	44.52	1,547.9	7.34	5.47
07	.13	1.06	553.4	.87	15.97
08	2.15	99.69	763.1	4.08	9.57
09	.13	4.45	517.7	1.73	16.90
10	2.16	105.52	810.8	4.15	9.02
11	.50	20.24	638.4	1.38	13.21
12	.26	3.95	410.3	.29	21.26
13	.11	.53	413.3	1.47	21.41
14	2.92	132.94	970.8	9.32	7.46
15	1.49	59.51	760.2	3.12	10.33
16	.42	22.32	421.6	.94	19.38
17	.15	10.07	405.0	.34	21.06
18	2.19	92.12	806.2	6.54	9.26
19	1.36	55.42	716.6	3.64	10.98
20	.28	12.06	348.4	.76	24.10
21	.13	1.06	513.2	1.10	17.22
22	2.95	141.89	1,078.7	9.14	6.77
23	1.45	58.93	664.2	3.31	11.65
24	.39	9.91	472.8	1.04	18.12
25	.03	.27	120.8	.44	73.20
26	2.97	147.98	1,090.8	9.34	6.65
27	1.54	60.09	652.1	3.55	11.81
28	.35	14.37	379.0	.94	22.04
29	.08	.53	375.2	2.17	23.59
30	.10	.69	407.4	1.52	21.71
31	.13	1.06	483.0	.87	18.29
32	.20	2.05	930.7	1.54	9.49
(BAG)	1.34	58.97	660.5	2.95	11.71
(CALC)	1.51	68.07	690.2	3.49	11.06
66	.03	.12	110.3	.20	80.28
67	1.44	18.10	1,5[illegible].0	2.80	5.45
68	.72	.17	602.5	.94	13.34
69	.32	.07	534.4	.92	16.57
70	.03	.09	435.9	1.75	20.35
71	.16	20.45	532.2	.72	15.71
72	1.79	67.34	566.9	2.01	13.08

MODE NO	HC	CO	CO2	NOX	MPG
33	.02	.27	120.8	.37	73.22
34	4.05	189.14	1,248.1	6.93	5.69
35	.54	37.71	508.2	1.25	15.59
36	.30	9.99	384.2	.52	22.14
37	.20	1.06	494.3	.94	17.87
38	3.17	177.92	1,088.6	5.99	6.44
39	.68	43.82	577.6	1.57	13.68
40	.36	5.98	462.7	.57	18.75
41	.06	.26	118.6	.35	74.48
42	3.91	200.56	1,285.0	8.56	5.50
43	1.73	73.17	665.8	2.80	11.28
44	1.00	17.08	417.3	.90	19.84
45	.06	.26	118.6	.22	74.48
46	3.86	175.06	1,197.0	7.70	5.97
47	.27	7.13	468.6	1.78	18.46
48	2.85	143.58	850.1	5.63	8.18
49	1.64	67.67	606.5	2.94	12.36
50	.67	17.53	363.0	.90	22.60
51	.15	1.08	378.7	1.71	23.30
52	.29	.99	510.3	1.50	17.30
53	.05	.26	121.1	.40	72.95
54	3.20	164.53	976.9	6.23	7.12
55	1.84	72.30	590.9	2.42	12.49
56	.84	19.53	406.1	1.03	20.20
57	.06	.26	119.9	.42	73.66
58	3.80	172.81	1,121.8	5.04	6.31
59	.31	5.47	458.6	1.96	18.96
60	3.43	176.11	921.5	6.07	7.34
61	1.85	83.32	665.8	2.69	11.05
62	.94	12.41	327.4	.87	25.36
63	.19	.53	383.6	1.49	23.05
64	.22	.97	452.3	1.66	19.52
65	.05	.26	123.6	.36	71.49

EMISSION RESULTS IN GRAMS PER MILE (PER MINUTE FOR IDLE).
FUEL ECONOMY IN MILES PER GALLON (MINUTES PER GALLON FOR IDLE)

APPENDIX E

LISTING OF MODAL RESULTS ON INDIVIDUAL VEHICLES
WASHINGTON, D.C.

VEHICLE	YEAR	MAKE	MODEL	CID
5016	75	CHEV	VEGA	140

MODE NO	HC	CO	CO2	NOX	MPG
01	.53	20.26	43.8	.00	114.88
02	.89	3.94	1,094.2	7.01	8.04
03	.09	.60	370.7	.38	23.86
04	.67	21.16	255.6	.02	30.44
05	.38	14.51	44.9	.00	128.95
06	2.85	56.59	1,061.6	1.45	7.65
07	.72	15.38	344.3	.05	23.94
08	.12	.00	729.2	2.89	12.16
09	.06	.00	397.7	.38	22.30
10	.12	.51	579.5	3.76	15.28
11	.04	.00	398.2	1.05	22.28
12	1.01	10.18	192.0	.17	42.03
13	.47	2.42	342.4	.14	25.53
14	.41	23.83	740.2	4.96	11.39
15	.05	1.34	507.8	2.95	17.40
16	1.03	7.02	221.9	.62	37.58
17	.13	.28	345.8	.46	25.60
18	.13	14.94	568.2	2.19	14.99
19	.03	.00	477.4	2.47	18.58
20	.93	9.29	219.9	.41	37.38
21	1.24	27.25	315.3	.04	24.51
22	.29	31.26	731.8	3.71	11.35
23	.02	.00	472.2	2.33	18.79
24	1.55	12.99	209.7	.35	37.77
25	.52	18.55	47.9	.00	112.85
26	.38	30.92	795.4	4.39	10.50
27	.03	.00	468.9	2.19	18.92
28	1.49	11.25	205.9	.33	38.87
29	.22	.57	355.6	.21	24.85
30	.92	20.50	209.9	.02	36.22
31	1.81	44.84	278.4	.00	25.03
32	2.38	70.19	404.6	.00	16.98
(BAG)	.74	15.81	447.2	1.99	18.72
(CALC)	.81	17.78	469.7	1.95	17.74
66	.42	11.50	36.1	.02	160.03
67	4.55	111.83	448.5	.30	13.89
68	2.24	47.26	258.0	.16	26.15
69	.06	.02	347.7	.32	25.51
70	.05	.00	305.7	.26	29.02
71	.40	9.42	294.6	.37	28.57
72	.17	9.82	383.1	1.01	22.24

MODE NO	HC	CO	CO2	NOX	MPG
33	.76	25.06	42.8	.00	104.98
34	.32	3.39	891.9	5.16	9.88
35	.03	.00	398.1	.62	22.29
36	1.81	17.59	192.8	.08	39.25
37	1.98	51.63	282.5	.00	23.99
38	.17	2.48	807.9	4.53	10.92
39	.04	.01	417.3	.93	21.26
40	2.58	21.54	223.9	.08	33.37
41	.95	27.64	40.9	.00	101.67
42	1.30	78.83	840.2	6.96	9.16
43	.04	.00	465.5	2.11	19.06
44	1.91	16.21	225.4	.32	34.55
45	.75	24.08	42.5	.00	107.35
46	1.25	16.75	965.9	4.69	8.90
47	.06	.64	361.6	.21	24.46
48	.27	32.49	596.7	3.05	13.68
49	.03	.00	477.2	2.32	18.59
50	1.88	11.31	205.8	.29	38.67
51	.93	7.71	294.4	.10	28.68
52	1.93	40.17	250.0	.00	27.80
53	.83	24.91	39.4	.00	109.43
54	.32	15.51	720.5	3.57	11.90
55	.03	.00	464.1	2.20	19.12
56	2.01	17.84	221.4	.28	34.69
57	.76	20.14	40.0	.00	119.89
58	1.25	22.71	862.4	2.79	9.83
59	.53	21.24	325.9	.18	24.59
60	.89	61.94	636.1	4.29	12.05
61	.06	.00	464.4	1.90	19.10
62	2.46	13.49	201.8	.32	38.46
63	1.36	11.89	279.5	.01	29.34
64	2.18	39.65	244.7	.00	28.27
65	.64	13.60	39.8	.00	140.54

EMISSION RESULTS IN GRAMS PER MILE (PER MINUTE FOR IDLE).
FUEL ECONOMY IN MILES PER GALLON (MINUTES PER GALLON FOR IDLE)

APPENDIX E

LISTING OF MODAL RESULTS ON INDIVIDUAL VEHICLES
WASHINGTON, D.C.

VEHICLE	YEAR	MAKE	MODEL	CID
5017	75	CHEV	CAMA	250

MODE NO	HC	CO	CO2	NOX	MPG
01	.47	16.86	75.0	.07	86.22
02	1.61	62.27	1,235.4	10.20	6.63
03	.14	3.22	281.2	.94	30.96
04	.73	21.02	331.3	.33	24.21
05	.37	11.23	82.2	.09	87.88
06	3.66	133.57	1,018.8	6.51	7.15
07	.77	17.75	359.8	1.16	22.75
08	.83	14.40	780.3	4.72	11.01
09	.08	.40	286.7	1.27	30.87
10	.18	1.32	687.8	6.07	12.85
11	.08	.08	397.4	1.79	22.31
12	.25	1.75	200.1	.29	43.59
13	.41	6.69	284.0	1.67	30.00
14	3.52	41.16	869.2	8.35	9.39
15	.92	21.88	446.2	4.47	18.35
16	.19	1.22	178.2	.42	49.12
17	.55	2.85	328.8	1.19	26.49
18	.83	30.45	718.9	8.09	11.53
19	.08	10.71	466.5	4.50	18.35
20	.54	6.96	232.1	.97	36.27
21	1.44	38.06	334.3	.36	22.26
22	2.19	57.31	887.6	11.01	9.01
23	.07	.20	441.6	4.70	20.07
24	.93	11.45	186.9	.58	42.71
25	.37	10.71	80.0	.13	90.57
26	2.13	46.01	963.8	11.02	8.51
27	.08	.09	437.0	5.17	20.29
28	.53	6.42	183.5	.81	45.46
29	.45	16.24	271.7	1.20	29.72
30	.44	16.43	225.7	.24	35.10
31	1.54	50.65	322.9	.29	21.78
32	2.97	86.78	611.2	.56	11.72
(BAG)	.89	34.58	463.9	3.44	17.03
(CALC)	1.07	26.25	495.2	4.10	16.44
66	.25	.16	79.0	.16	110.99
67	3.18	2.74	924.5	.91	9.45
68	.65	1.03	531.7	.29	16.57
69	.33	.36	362.1	.25	24.40
70	.09	.00	273.2	.60	32.45
71	.04	.00	346.4	.65	25.61
72	.00	.00	443.4	.04	20.01

MODE NO	HC	CC	CO2	NOX	MPG
33	.39	12.79	79.3	.11	88.26
34	3.60	6.29	1,030.9	10.30	8.43
35	.06	.19	321.7	2.61	27.54
36	.61	13.06	192.5	.42	41.29
37	1.54	52.30	320.1	.22	21.80
38	1.06	35.41	897.9	9.77	9.27
39	.28	9.01	378.1	2.11	22.57
40	.75	15.94	321.5	.35	25.44
41	.38	21.08	79.3	.09	78.16
42	3.81	128.42	901.0	6.70	7.96
43	.17	.20	437.0	5.52	20.27
44	.97	19.46	267.3	1.19	29.49
45	.45	29.38	73.6	.07	73.26
46	1.25	9.58	995.5	7.27	8.74
47	.24	8.44	282.6	1.05	29.92
48	1.69	45.38	679.9	6.61	11.73
49	.12	.17	428.4	5.56	20.68
50	.87	14.89	202.8	1.08	38.77
51	.52	3.00	255.2	.87	33.94
52	1.05	66.66	319.0	.48	20.78
53	.45	26.29	72.2	.05	77.26
54	1.26	40.48	782.3	7.52	10.44
55	.08	.06	441.0	5.86	20.11
56	1.06	20.06	258.8	.97	30.22
57	.49	29.75	71.5	.05	74.12
58	1.29	22.13	908.8	6.39	9.36
59	.56	19.68	267.5	.65	29.57
60	3.02	105.29	712.1	4.62	10.00
61	.19	1.16	446.2	5.39	19.78
62	1.16	22.59	150.0	.54	46.92
63	.67	9.10	252.4	.62	33.01
64	1.39	61.19	292.9	.40	22.55
65	.43	17.13	73.6	.07	87.15

EMISSION RESULTS IN GRAMS PER MILE (PER MINUTE FOR IDLE).
FUEL ECONOMY IN MILES PER GALLON (MINUTES PER GALLON FOR IDLE)

APPENDIX E

LISTING OF MODAL RESULTS ON INDIVIDUAL VEHICLES
WASHINGTON, D.C.

VEHICLE	YEAR	MAKE	MODEL	CID
5018	75	CHEV	MONT	350

MODE NO	HC	CO	CO2	NOX	MPG
01	.04	1.94	91.3	.06	93.98
02	.59	36.15	981.1	8.54	8.53
03	.69	22.32	544.8	.77	15.24
04	.27	9.00	472.0	.59	18.22
05	.02	.00	95.1	.04	93.29
06	1.81	72.18	911.6	.97	8.61
07	.51	18.91	649.8	.22	13.03
08	.56	21.01	602.7	4.30	13.92
09	.88	27.38	514.3	.99	15.84
10	.23	10.65	572.4	8.19	15.04
11	.06	4.45	479.0	.29	18.25
12	.20	3.07	516.1	.09	17.01
13	1.07	21.20	299.9	.55	26.37
14	.65	21.62	640.0	7.22	13.12
15	.03	6.12	553.9	5.51	15.74
16	.33	3.24	493.8	2.35	17.75
17	.20	8.91	309.0	1.03	27.42
18	.09	.32	632.6	11.95	14.01
19	.04	.28	619.8	5.88	14.30
20	.27	2.89	429.1	1.50	20.43
21	.57	14.46	434.9	.15	19.32
22	.20	18.14	765.4	10.91	11.17
23	.03	.56	586.8	5.32	15.10
24	.13	2.96	399.9	1.56	21.91
25	.04	2.78	93.8	.06	90.34
26	.14	4.47	955.3	12.86	9.21
27	.03	.00	573.6	5.32	15.47
28	.30	4.98	345.5	1.18	25.05
29	.82	24.57	362.6	.92	21.98
30	.48	20.93	394.9	.71	20.67
31	1.22	40.16	400.1	.22	19.00
32	1.95	73.06	742.2	.42	10.28
(BAG)	.34	15.25	568.4	4.31	14.96
(CALC)	.36	15.53	577.4	4.46	14.72
66	.18	1.68	84.1	.04	101.72
67	9.09	279.96	884.1	.22	6.56
68	2.99	62.89	634.0	.33	11.95
69	1.91	33.31	430.9	.29	18.14
70	1.26	28.74	331.2	1.19	23.33
71	.04	.94	423.9	1.85	20.86
72	.02	8.54	480.6	.02	17.96

MODE NO	HC	CO	CO2	NOX	MPG
33	.15	6.12	83.9	.06	94.50
34	.20	11.20	937.2	10.64	9.28
35	.08	10.03	513.3	.66	16.76
36	.38	11.20	371.4	.32	22.74
37	.93	37.92	415.0	.15	18.58
38	.27	31.85	667.6	11.54	12.35
39	.05	14.51	556.3	.69	15.32
40	.40	11.48	294.3	.09	28.30
41	.18	5.29	90.1	.04	89.74
42	1.29	102.42	1,014.8	7.21	7.52
43	.04	4.45	593.4	3.31	14.78
44	.24	6.90	321.2	1.63	26.67
45	.04	3.06	91.3	.06	92.26
46	.68	38.81	786.2	6.85	10.45
47	.86	40.35	463.5	.81	16.75
48	.17	7.77	649.6	10.25	13.40
49	.03	1.11	469.0	4.00	18.85
50	.23	4.24	370.2	1.28	23.51
51	.85	27.95	539.8	.77	15.13
52	1.01	29.28	529.9	1.03	15.32
53	.35	8.36	91.3	.15	84.13
54	.26	10.56	771.8	11.89	11.24
55	.03	.56	580.2	4.54	15.27
56	.34	11.84	363.6	.72	23.16
57	.23	7.52	219.1	.11	38.32
58	.82	55.88	784.8	3.11	10.14
59	.92	31.32	307.4	.66	24.68
60	.36	27.93	746.0	7.17	11.22
61	.04	8.08	606.6	2.11	14.32
62	.38	8.60	380.1	2.72	22.48
63	.89	34.14	274.8	.81	26.79
64	.98	30.60	470.9	.40	17.00
65	.35	10.60	90.1	.04	82.33

EMISSION RESULTS IN GRAMS PER MILE (PER MINUTE FOR IDLE).
FUEL ECONOMY IN MILES PER GALLON (MINUTES PER GALLON FOR IDLE)

APPENDIX E

LISTING OF MODAL RESULTS ON INDIVIDUAL VEHICLES
WASHINGTON, D.C.

VEHICLE	YEAR	MAKE	MODEL	CID
5019	75	CHEV	IMPA	350

MODE NO	HC	CO	CO2	NOX	MPG
01	.01	.27	122.4	.08	72.28
02	1.31	81.07	1,240.0	2.41	6.47
03	.32	48.18	450.2	.21	16.84
04	.08	6.06	546.2	.35	15.96
05	.01	.68	127.3	.17	69.14
06	.19	16.38	1,469.9	.75	5.93
07	.08	26.23	562.9	.16	14.68
08	.37	36.29	844.7	.76	9.83
09	.21	34.87	459.7	.09	17.23
10	.70	39.99	665.5	1.53	12.14
11	.50	48.36	438.5	.74	17.19
12	.15	18.92	322.0	.06	25.20
13	.08	6.16	412.3	.25	21.02
14	2.22	148.10	789.1	3.09	8.62
15	1.11	85.73	497.1	2.36	13.97
16	.43	32.06	315.1	.67	24.19
17	.10	16.26	402.6	.24	20.71
18	.82	49.98	664.0	4.08	11.91
19	.91	63.43	494.6	2.64	14.86
20	.42	25.80	323.4	.57	24.30
21	.08	9.02	518.2	.07	16.66
22	2.43	130.82	815.0	5.31	3.63
23	1.01	61.17	484.9	2.43	15.19
24	.69	34.78	357.1	.69	21.44
25	.02	1.48	126.5	.28	68.89
26	1.45	79.02	897.9	5.56	8.64
27	.93	54.07	480.2	2.39	15.62
28	.51	30.13	308.6	.67	24.82
29	.30	21.23	394.3	.12	20.71
30	.48	51.46	349.3	.14	20.56
31	.07	9.00	524.7	.44	16.46
32	.09	3.90	976.3	.63	9.03
(BAG)	1.00	63.46	550.1	1.95	13.59
(CALC)	1.03	63.57	563.1	2.05	13.32
66	.02	.03	103.8	.23	85.46
67	.81	.00	1,172.3	1.81	7.55
68	.35	.00	759.9	.80	11.66
69	.09	.00	511.6	.56	17.34
70	.03	6.92	449.4	.16	19.28
71	.05	12.36	448.3	.31	18.97
72	1.08	55.56	443.5	.66	16.61

MODE NO	HC	CO	CO2	NOX	MPG
33	.01	.83	126.1	.04	69.68
34	1.64	89.20	898.0	4.12	8.50
35	1.17	83.25	400.0	.75	16.60
36	.75	42.78	339.8	.18	21.68
37	.10	7.44	524.7	.20	16.53
38	1.39	79.04	853.4	4.15	9.03
39	.70	65.99	437.9	.95	16.32
40	.46	29.50	398.2	.17	19.90
41	.01	1.31	128.8	.11	67.83
42	2.57	169.69	920.2	4.25	7.42
43	1.18	78.14	476.5	2.15	14.71
44	.84	33.82	357.6	.65	21.47
45	.03	2.80	128.2	.08	66.91
46	2.20	141.17	1,038.8	2.00	7.00
47	.62	57.45	435.6	.27	16.81
48	1.38	70.97	688.9	4.73	11.02
49	1.31	84.65	475.4	2.22	14.48
50	.90	38.84	307.6	.60	23.89
51	.36	25.80	383.0	.06	20.90
52	.80	74.77	487.9	.21	14.60
53	.02	1.94	128.8	.14	67.30
54	1.83	89.52	786.2	5.32	9.51
55	1.19	70.48	465.8	2.02	15.29
56	.60	31.49	362.4	.50	21.45
57	.03	4.48	127.2	.01	66.09
58	2.13	133.59	972.7	1.61	7.46
59	.81	60.59	409.8	.21	17.48
60	1.87	87.96	764.5	5.40	9.76
61	1.45	102.25	455.8	1.77	14.29
62	1.08	40.15	306.7	.65	23.78
63	.33	25.81	394.8	.13	20.33
64	.89	73.57	496.4	.26	14.43
65	.03	5.65	126.2	.02	65.68

EMISSION RESULTS IN GRAMS PER MILE (PER MINUTE FOR IDLE).
FUEL ECONOMY IN MILES PER GALLON (MINUTES PER GALLON FOR IDLE)

APPENDIX E

LISTING OF MODAL RESULTS ON INDIVIDUAL VEHICLES
WASHINGTON, D.C.

VEHICLE	YEAR	MAKE	MODEL	CID
5020	75	CHEV	IMPA	350

MODE NO	HC	CO	CO2	NOX	MPG
01	.01	.00	63.3	.01	140.21
02	.25	11.11	1,201.7	9.20	7.27
03	.06	.00	517.7	.33	17.13
04	.17	.00	430.1	.25	20.61
05	.01	.13	68.3	.01	129.64
06	.18	.00	1,522.5	1.82	5.82
07	.08	1.06	553.4	.50	15.98
08	.10	.00	873.5	4.08	10.15
09	.05	.00	492.2	.55	18.02
10	.12	.16	783.6	7.36	11.31
11	.05	.02	516.8	1.84	17.16
12	.15	.02	267.9	.55	33.07
13	.06	5.57	390.4	.33	22.22
14	2.16	152.29	817.4	5.20	8.34
15	.11	.27	664.2	5.17	13.34
16	.09	.31	376.5	.32	23.52
17	.04	.00	396.4	1.15	22.38
18	.04	.00	697.5	9.92	12.72
19	.03	.01	624.0	5.54	14.22
20	.04	.02	403.4	1.23	21.99
21	.00	327.67	478.0	.58	8.93
22	1.03	19.02	973.5	10.21	8.81
23	.02	.27	620.0	5.17	14.30
24	.03	.00	368.8	.49	24.06
25	.00	.27	78.2	.05	112.96
26	.17	13.52	1,069.2	12.49	8.13
27	.01	.27	610.7	3.51	14.52
28	.02	.34	315.1	.71	28.11
29	.00	.25	403.1	.36	21.99
[illegible]	.00	.00	358.4	.13	24.76
31	.00	.00	452.9	.50	19.59
32	.00	.00	660.6	.69	13.43
(BAG)	.18	12.76	607.5	3.85	14.13
(CALC)	.22	15.82	629.1	4.08	13.55
66	.05	.03	66.2	.03	133.71
67	1.19	.21	888.0	.33	9.94
68	.28	.08	570.0	.30	15.54
69	.04	.00	497.6	.50	17.83
70	.07	2.58	465.4	.28	18.89
71	.02	1.06	473.3	.86	18.68
72	.02	2.85	531.1	2.44	16.57

MODE NO	HC	CO	CO2	NOX	MPG
33	.00	.27	72.0	.05	122.62
34	.07	6.38	1,052.7	9.63	8.35
35	.01	.35	499.5	.73	17.74
36	.00	.00	337.6	.28	26.29
37	.00	1.06	488.0	.36	18.12
38	.08	15.94	965.7	9.79	8.95
39	.09	.17	525.4	1.03	16.87
40	.05	.00	320.7	.31	27.66
41	.00	41.80	95.7	.05	55.00
42	2.72	196.40	1,099.7	5.80	6.26
43	.04	.27	614.7	4.43	14.42
44	.01	.00	413.4	1.30	21.47
45	.00	.13	67.0	.05	132.11
46	.04	41.89	1,139.4	8.77	7.36
47	.40	13.42	438.7	.29	19.25
48	.05	4.07	706.4	10.32	12.44
49	.03	1.10	624.0	3.32	14.18
50	.04	.00	309.3	.23	28.68
51	.00	.00	380.4	.62	23.33
52	.00	.00	443.9	.26	19.99
53	.00	.27	75.7	.03	116.65
54	.06	.86	935.4	12.84	9.47
55	.03	6.71	590.8	3.69	14.75
56	.05	.96	402.1	.81	21.98
57	.00	.13	70.8	.03	125.09
58	.65	76.42	1,137.3	5.43	7.04
59	.37	11.17	428.5	.33	19.84
60	.2[illegible]	30.01	894.4	5.72	9.41
61	.14	2.78	664.2	3.14	13.26
62	.03	1.78	324.9	.66	27.08
63	.02	3.89	352.4	.21	24.75
64	.00	.00	345.7	.19	25.67
65	.00	.00	75.7	.03	117.27

EMISSION RESULTS IN GRAMS PER MILE (PER MINUTE FOR IDLE).
FUEL ECONOMY IN MILES PER GALLON (MINUTES PER GALLON FOR IDLE)

APPENDIX E

LISTING OF MODAL RESULTS ON INDIVIDUAL VEHICLES
WASHINGTON, D.C.

VEHICLE	YEAR	MAKE	MODEL	CID
5021	75	CHEV	CAPR	400

MODE NO	HC	CO	CO2	NOX	MPG
01	.01	.28	113.4	.16	77.98
02	.47	.93	1,732.8	32.45	5.11
03	.06	.56	526.2	4.47	16.83
04	.10	.00	598.6	1.56	14.82
05	.02	.00	114.7	.16	77.36
06	.46	1.86	1,440.3	18.42	6.14
07	.08	.00	807.4	1.89	10.98
08	.36	.73	989.3	21.61	8.95
09	.07	.00	608.4	3.30	14.58
10	.22	.45	816.3	18.39	10.85
11	.07	.00	702.5	8.72	12.63
12	.66	.00	392.8	2.41	22.47
13	.12	.00	401.2	1.65	22.10
14	.85	173.01	1,022.4	17.08	6.84
15	.47	.84	873.3	9.06	10.13
16	.34	.33	536.0	5.71	16.51
17	.22	.00	379.9	4.06	23.32
18	.16	1.28	860.2	18.35	10.28
19	.08	.00	783.7	1.84	11.25
20	.24	.00	434.5	3.26	20.39
21	.05	1.12	524.0	.63	16.87
22	.26	1.55	1,255.3	22.55	7.05
23	.06	.28	761.4	13.55	11.64
24	.27	.00	532.8	4.03	16.63
25	.02	.00	119.7	.27	74.14
26	.22	1.35	1,298.6	24.48	6.82
27	.06	.28	734.1	14.09	12.08
28	.20	.00	373.0	3.56	23.75
29	.04	.00	403.7	2.12	21.97
30	.05	.00	457.2	1.32	19.40
31	.11	1.12	529.1	.63	16.70
32	.18	2.16	1,077.6	1.21	8.20
(BAG)	.21	3.91	766.4	10.28	11.48
(CALC)	.22	4.23	814.9	10.99	10.78
66	.05	.00	111.1	.13	79.78
67	1.11	.93	1,212.6	.85	7.28
68	.62	.62	640.6	.33	13.79
69	.21	.02	579.8	.73	15.29
70	.10	.00	458.7	2.17	19.33
71	.05	.01	489.6	5.33	18.12
72	.08	.11	597.5	10.88	14.84

MODE NO	HC	CO	CO2	NOX	MPG
33	.03	.28	123.5	.16	71.58
34	.30	.58	1,389.4	24.29	6.37
35	.06	.00	618.4	7.50	14.34
36	.20	.00	649.4	2.33	13.65
37	.13	.00	559.3	.94	15.85
38	.31	.55	1,187.8	23.38	7.46
39	.10	.37	709.5	8.57	12.49
40	.24	.68	539.7	2.58	16.39
41	.03	.28	123.5	.24	71.58
42	.57	14.12	1,666.3	23.26	5.25
43	.11	.28	817.7	13.33	10.84
44	.23	.00	443.5	3.54	19.98
45	.02	.00	126.0	.16	70.43
46	.37	.95	1,626.6	26.15	5.44
47	.05	.56	585.2	3.84	15.14
48	.22	1.12	1,081.6	19.55	8.18
49	.11	.28	788.7	13.08	11.24
50	.24	.36	450.3	3.48	19.65
51	.08	.56	408.9	2.44	21.64
52	.14	1.05	676.7	1.48	13.07
53	.03	.28	126.0	.16	70.17
54	.23	.88	1,187.7	21.81	7.45
55	.12	.28	743.6	12.64	11.92
56	.20	.00	461.6	3.75	19.20
57	.03	.00	129.7	.20	68.40
58	.39	.95	1,398.1	19.69	6.33
59	.06	.56	549.3	3.53	16.12
60	.34	7.18	1,271.2	20.63	6.91
61	.14	.28	905.6	12.28	9.79
62	.22	.00	452.9	3.87	19.56
63	.06	.56	393.6	1.96	22.48
64	.13	.00	553.3	1.29	16.02
65	.03	.28	129.7	.16	68.17

EMISSION RESULTS IN GRAMS PER MILE (PER MINUTE FOR IDLE).
FUEL ECONOMY IN MILES PER GALLON (MINUTES PER GALLON FOR IDLE)

APPENDIX E

LISTING OF MODAL RESULTS ON INDIVIDUAL VEHICLES
WASHINGTON, D.C.

VEHICLE	YEAR	MAKE	MODEL	CID
5022	75	CHRY	NEWY	440

MODE NO	HC	CO	CO2	NOX	MPG
01	.18	5.81	167.5	.00	50.10
02	.19	4.16	2,529.8	13.14	3.49
03	.02	.06	586.1	1.27	15.14
04	.14	.21	580.2	.65	15.27
05	.02	.29	153.8	.00	57.53
06	.05	.39	2,492.2	5.68	3.56
07	.05	.23	769.7	.51	11.52
08	.04	.15	1,392.4	6.96	6.37
09	.02	.06	560.8	1.71	15.82
10	.06	1.10	1,181.0	9.23	7.50
11	.00	.04	663.7	1.89	13.37
12	.06	.09	287.7	.23	30.81
13	.02	.06	485.2	1.06	18.28
14	1.10	59.53	1,250.2	8.28	6.58
15	.34	1.11	968.6	.73	9.13
16	.12	.47	448.3	1.10	19.75
17	.01	.03	603.5	1.36	14.70
18	.10	11.50	1,057.9	5.97	8.24
19	.00	.09	768.1	3.75	11.55
20	.08	.43	435.2	.78	20.35
21	.03	1.95	659.9	.14	13.38
22	.60	56.79	1,417.5	9.44	5.88
23	.00	.14	768.2	3.95	11.55
24	.13	.87	374.7	.48	23.57
25	.01	.06	161.2	.11	55.04
26	.34	66.16	1,468.6	11.64	5.64
27	.00	.12	761.5	4.01	11.65
28	.07	1.03	359.0	.51	24.59
29	.00	.06	565.9	.98	15.68
30	.02	.97	472.6	.19	18.72
31	.02	.23	669.8	.14	13.24
32	.04	2.44	1,242.6	.00	7.12
(BAG)	.21	15.22	824.7	3.72	10.45
(CALC)	.20	16.85	847.6	3.98	10.14
66	.21	3.87	141.6	.02	59.84
67	2.51	43.37	1,659.5	.64	5.11
68	.20	.59	867.8	.43	10.20
69	.10	.31	640.8	.43	13.83
70	.00	.04	459.6	.00	19.30
71	.01	.02	514.7	2.54	17.24
72	.01	.01	636.0	4.38	13.95

MODE NO	HC	CO	CO2	NOX	MPG
33	.01	.77	158.7	.00	55.50
34	.04	.42	1,649.3	12.80	5.37
35	.00	.04	603.5	1.87	14.70
36	.01	1.05	476.8	.49	18.55
37	.02	.23	397.1	1.09	22.33
38	.18	13.60	1,495.0	8.30	5.85
39	.01	.08	663.7	1.68	13.37
40	.02	2.02	409.7	.04	21.49
41	.00	.26	156.3	.09	56.65
42	1.64	108.75	1,498.4	8.84	5.30
43	.02	.40	775.0	3.95	11.44
44	.02	1.52	429.8	1.23	20.53
45	.01	.14	161.2	.13	54.99
46	.02	.30	1,953.3	9.83	4.54
47	.02	.12	548.2	1.75	16.18
48	.59	72.53	1,120.8	8.41	7.17
49	.01	.35	641.4	3.95	13.82
50	.02	4.40	372.2	1.78	23.41
51	.01	.17	540.8	.69	16.40
52	.06	14.77	298.7	.00	27.55
53	.03	2.53	99.3	.05	85.92
54	.21	51.35	1,310.2	8.55	6.37
55	.00	.06	697.2	3.63	12.72
56	.10	4.93	452.0	.81	19.29
57	.08	5.67	156.3	.25	53.66
58	.01	.78	1,751.4	7.53	5.06
59	.00	.69	512.9	1.64	17.26
60	1.02	86.49	1,172.4	6.06	6.76
61	.03	.89	788.5	3.10	11.23
62	.11	2.90	360.9	.23	24.26
63	.01	.23	545.7	.84	16.25
64	.10	12.09	608.3	.00	14.14
65	.07	4.92	157.5	.00	53.65

EMISSION RESULTS IN GRAMS PER MILE (PER MINUTE FOR IDLE).
FUEL ECONOMY IN MILES PER GALLON (MINUTES PER GALLON FOR IDLE)

APPENDIX E

LISTING OF MODAL RESULTS ON INDIVIDUAL VEHICLES
WASHINGTON, D.C.

VEHICLE	YEAR	MAKE	MODEL	CID
5023	75	DODG	CHAR	360

MODE NO	HC	CO	CO2	NOX	MPG
01	.09	.00	117.8	.11	75.20
02	.85	.20	1,536.9	13.21	5.76
03	.31	.00	577.0	2.25	15.35
04	.62	1.15	536.6	1.26	16.42
05	.07	.00	117.8	.07	75.22
06	1.17	.00	1,022.4	9.65	8.64
07	1.03	.00	636.6	1.25	13.87
08	.54	.30	1,014.1	8.33	8.73
09	.36	.00	523.4	3.57	16.92
10	.25	.02	793.1	11.12	11.18
11	.19	.00	525.1	4.07	16.88
12	.26	.73	296.7	2.29	29.72
13	.49	.00	431.9	1.43	20.47
14	1.20	66.09	868.4	9.62	9.09
15	.27	1.27	684.4	3.39	12.91
16	.16	2.79	413.9	2.23	21.19
17	.22	.08	418.8	2.55	21.15
18	.18	.27	780.1	12.60	11.36
19	.08	.12	678.9	4.03	13.06
20	.17	.86	348.9	1.39	25.30
21	.18	.00	526.2	.66	16.84
22	.32	8.89	1,169.5	14.78	7.49
23	.06	.12	632.3	4.03	14.02
24	.45	2.85	405.6	1.44	21.57
25	.03	.00	125.3	.09	70.80
26	.22	5.42	1,199.4	14.49	7.34
27	.08	1.24	620.3	4.18	14.25
28	.47	1.22	317.1	1.81	27.69
29	.29	.00	477.6	1.69	18.54
30	.29	18.72	428.6	57	19.34
31	.06	.24	521.2	.22	17.01
32	.11	.00	994.6	.42	8.92
(BAG)	.37	6.32	676.0	4.96	12.92
(CALC)	.28	6.17	696.6	5.60	12.55
66	.04	.03	119.1	.02	74.43
67	.67	.09	1,407.9	.22	6.29
68	.16	.93	911.9	1.51	9.71
69	.57	.18	585.0	1.22	15.11
70	.65	.00	395.5	3.60	22.32
71	.12	.00	416.8	5.55	21.27
72	.08	.03	520.4	7.05	17.04

MODE NO	HC	CO	CO2	NOX	MPG
33	.01	.00	125.3	.05	70.84
34	.25	2.93	1,312.4	11.48	6.73
35	.06	.16	507.9	3.95	17.46
36	.23	4.90	377.3	1.66	23.01
37	.51	.00	561.3	1.40	15.76
38	.27	1.03	1,163.2	12.00	7.61
39	.05	.77	561.4	3.04	15.77
40	.22	4.65	426.2	1.29	20.44
41	.03	.03	125.3	.05	70.78
42	.80	94.11	1,296.2	14.42	6.13
43	.11	1.18	649.6	3.76	13.61
44	.31	2.44	33.1	1.27	234.55
45	.04	.00	121.5	.07	73.00
46	.30	2.75	1,454.6	8.68	6.07
47	.13	.12	467.4	2.25	18.96
48	.18	1.00	822.9	12.21	10.75
49	.13	2.95	610.9	3.85	14.22
50	.44	3.75	379.4	1.38	22.95
51	.26	.00	419.4	1.44	21.12
52	.48	18.99	616.3	1.31	13.70
53	.03	.00	126.5	.05	70.13
54	.20	2.54	1,089.6	11.31	8.11
55	.08	.67	592.5	4.58	14.94
56	.17	1.13	400.5	1.27	22.03
57	.03	.00	122.8	.05	72.24
58	.22	1.28	1,351.1	8.85	6.55
59	.14	.00	452.2	2.83	19.60
60	.30	8.66	901.8	12.87	9.68
61	.10	1.83	641.6	3.26	13.76
62	.33	5.12	361.4	1.16	23.95
63	.19	.00	421.8	1.58	21.01
64	.36	22.61	527.3	.47	15.73
65	.02	.00	125.3	.02	70.82

EMISSION RESULTS IN GRAMS PER MILE (PER MINUTE FOR IDLE).
FUEL ECONOMY IN MILES PER GALLON (MINUTES PER GALLON FOR IDLE)

APPENDIX E

LISTING OF MODAL RESULTS ON INDIVIDUAL VEHICLES
WASHINGTON, D.C.

VEHICLE	YEAR	MAKE	MODEL	CID
5024	75	DODG	DART	225

MODE NO	HC	CO	CO2	NOX	MPG
01	.95	39.90	60.3	.08	70.45
02	2.31	70.90	1,094.1	26.50	7.31
03	1.88	55.38	246.8	1.58	26.12
04	3.95	115.30	266.6	.27	19.28
05	.91	38.44	61.5	.08	71.16
06	5.37	208.68	633.7	5.31	9.06
07	3.56	137.45	331.7	.30	15.87
08	2.48	65.25	680.9	17.75	11.21
09	1.84	56.54	267.1	1.11	24.53
10	.98	12.56	603.7	20.46	14.16
11	.37	4.07	343.9	5.82	25.25
12	2.04	29.12	206.7	1.81	34.28
13	2.10	66.98	221.4	.63	26.63
14	1.27	29.84	826.8	21.91	10.11
15	.20	5.04	464.4	9.38	18.76
16	4.00	13.84	218.2	1.06	35.14
17	1.14	18.88	304.4	1.16	26.28
18	.30	3.16	644.2	3.07	13.65
19	.10	.51	431.4	10.35	20.52
20	2.30	32.12	198.4	2.82	34.65
21	3.36	154.92	281.3	.62	16.57
22	.47	15.22	831.2	24.11	10.36
23	.12	.22	423.6	11.47	20.91
24	3.23	48.10	259.5	1.26	25.70
25	.84	38.15	66.5	.12	68.77
26	.55	15.90	737.0	24.03	11.62
27	.12	.06	419.6	12.54	21.13
28	2.64	29.17	202.0	1.93	34.64
29	1.94	69.89	201.2	.63	27.98
30	2.51	79.25	185.4	.30	27.92
31	3.36	151.42	266.2	.30	17.24
32	6.85	291.75	493.5	.59	9.11
(BAG)	1.38	38.45	445.9	9.08	17.38
(CALC)	1.53	37.43	456.5	9.69	17.06
66	1.03	39.64	55.4	.03	73.40
67	2.95	117.82	168.7	.10	24.44
68	6.12	233.57	415.3	.22	11.07
69	4.08	160.36	229.1	.13	17.96
70	2.12	70.88	198.7	.48	28.02
71	.15	2.21	296.9	2.31	29.50
72	.08	.00	382.8	11.14	23.17

MODE NO	HC	CO	CO2	NOX	MPG
33	.91	38.15	64.0	.08	70.00
34	.68	23.56	803.5	24.45	10.53
35	.29	4.83	325.0	3.06	26.61
36	2.17	44.75	183.0	.22	34.12
37	3.30	153.75	271.2	.30	16.96
38	.96	25.00	795.5	21.94	10.59
39	.37	8.23	306.1	3.79	27.71
40	2.71	70.76	213.6	.96	26.62
41	.79	37.85	64.0	.08	70.47
42	1.17	41.21	990.9	22.46	8.37
43	.10	.22	431.4	11.54	20.54
44	3.43	50.60	232.1	.91	27.52
45	.84	37.85	66.5	.08	69.03
46	1.93	64.59	870.6	20.18	9.07
47	1.71	62.92	226.5	.95	26.83
48	.37	7.45	702.0	21.19	12.41
49	.10	.22	420.9	10.69	21.05
50	2.46	27.11	174.5	1.01	39.46
51	1.97	67.58	224.0	.63	26.38
52	3.64	134.45	254.5	.29	18.59
53	1.00	37.85	66.5	.08	68.75
54	.49	13.35	723.2	23.29	11.90
55	.12	.22	415.7	13.24	21.31
56	2.37	50.59	191.7	1.54	31.84
57	.86	38.15	64.0	.12	70.08
58	1.65	52.80	842.8	12.67	9.53
59	1.62	62.92	262.1	1.11	24.24
60	.94	21.00	732.6	22.19	11.54
61	.13	.51	424.9	10.35	20.83
62	3.07	27.47	191.6	.97	36.31
63	2.04	74.54	221.4	.77	25.73
64	3.49	120.45	266.6	.42	19.00
65	.89	38.73	64.0	.08	69.52

EMISSION RESULTS IN GRAMS PER MILE (PER MINUTE FOR IDLE).
FUEL ECONOMY IN MILES PER GALLON (MINUTES PER GALLON FOR IDLE)

APPENDIX E

LISTING OF MODAL RESULTS ON INDIVIDUAL VEHICLES
WASHINGTON, D.C.

VEHICLE	YEAR	MAKE	MODEL	CID
5025	75	FORD	MUST	140

MODE NO	HC	CO	CO2	NOX	MPG
01	.11	1.12	78.4	.17	110.28
02	1.55	18.66	934.5	12.31	9.16
03	.30	7.29	310.2	1.52	27.51
04	.25	4.03	336.2	.73	25.85
05	.08	1.12	75.9	.15	113.96
06	1.41	29.79	1,062.3	6.51	7.97
07	.34	7.85	383.7	.44	22.35
08	1.06	7.29	644.8	4.67	13.45
09	.30	6.17	317.8	1.48	27.03
10	.74	3.13	565.2	8.12	15.50
11	.32	1.12	381.9	1.26	23.07
12	.15	.44	248.6	.50	35.54
13	.16	4.49	262.2	.82	32.90
14	1.62	65.17	657.9	12.38	11.59
15	.45	3.65	485.1	3.89	18.03
16	.41	.98	303.9	1.62	28.93
17	.28	1.12	318.7	1.11	27.62
18	.57	3.20	558.6	9.10	15.69
19	.33	1.12	465.4	3.71	18.95
20	.22	.83	271.7	.88	32.43
21	.25	5.60	318.7	.52	27.03
22	.76	23.80	719.4	12.24	11.69
23	.29	1.40	453.7	3.37	19.42
24	.40	1.49	299.8	.99	29.25
25	.07	1.12	78.4	.15	110.43
26	.78	16.31	709.3	13.12	12.03
27	.27	1.68	453.7	3.19	19.41
28	.17	1.08	431.1	.76	20.48
29	.12	4.49	269.8	.85	32.02
30	.11	2.90	261.5	.62	33.32
31	.23	6.73	318.7	.44	26.90
32	.49	15.12	604.4	.86	14.09
(BAG)	.40	7.78	464.4	4.23	18.58
(CALC)	.44	7.47	482.6	4.73	17.90
66	.11	.92	73.4	.13	118.13
67	1.32	10.40	853.4	1.42	10.15
68	1.45	16.64	585.6	.74	14.47
69	.34	10.71	371.5	.57	22.79
70	.29	6.18	285.0	1.62	30.02
71	.25	1.76	339.9	1.07	25.84
72	.21	2.02	415.1	3.60	21.18

MODE NO	HC	CO	CO2	NOX	MPG
33	.07	2.24	78.4	.13	108.07
34	.82	7.02	809.8	11.59	10.77
35	.18	1.12	373.3	1.21	23.62
36	.10	1.07	253.6	.43	34.73
37	.25	6.72	313.6	.37	27.31
38	.78	13.78	725.1	9.56	11.84
39	.24	.75	383.8	1.73	23.01
40	.15	2.04	290.8	.81	30.14
41	.07	2.24	78.4	.15	108.07
42	.82	40.91	837.2	14.82	9.81
43	.28	1.68	467.3	3.98	18.85
44	.23	1.98	301.7	1.05	29.05
45	.07	1.96	78.4	.15	108.65
46	1.08	11.41	845.7	8.29	10.23
47	.19	6.73	315.2	1.07	27.20
48	.60	3.73	595.1	10.34	14.72
49	.28	1.68	330.4	3.55	26.58
50	.22	1.07	248.5	1.18	35.38
51	.13	5.04	269.8	.81	31.91
52	.22	5.31	360.0	.63	23.94
53	.07	2.52	79.6	.15	105.94
54	.70	8.87	884.3	10.53	9.85
55	.24	1.40	443.7	3.06	19.87
56	.13	1.98	301.6	.82	29.09
57	.07	1.96	79.6	.15	107.07
58	1.04	9.49	792.2	7.08	10.95
59	.16	6.17	297.5	1.19	28.85
60	.59	12.49	682.5	11.47	12.60
61	.25	1.68	460.7	3.89	19.12
62	.23	.72	260.0	.88	33.90
63	.13	4.48	284.9	1.30	30.36
64	.14	6.15	337.3	.68	25.55
65	.07	2.24	79.6	.17	106.50

EMISSION RESULTS IN GRAMS PER MILE (PER MINUTE FOR IDLE).
FUEL ECONOMY IN MILES PER GALLON (MINUTES PER GALLON FOR IDLE)

APPENDIX E

LISTING OF MODAL RESULTS ON INDIVIDUAL VEHICLES
WASHINGTON, D.C.

VEHICLE	YEAR	MAKE	MODEL	CID
5026	75	FORD	TORI	351

MODE NO	HC	CO	CO2	NOX	MPG
01	.22	1.36	147.9	.25	58.89
02	1.76	8.94	1,451.5	14.24	6.03
03	.30	5.94	503.1	1.67	17.29
04	.52	5.28	589.8	1.03	14.79
05	.21	1.83	151.0	.30	57.44
06	1.77	12.71	1,655.2	5.97	5.28
07	.56	7.76	659.8	.82	13.17
08	1.10	4.18	993.3	6.55	8.84
09	.30	3.61	507.5	1.48	17.26
10	.81	2.99	842.5	7.93	10.44
11	.30	2.24	522.8	2.14	16.83
12	.47	1.91	354.8	.65	24.70
13	.28	1.75	456.9	1.02	19.27
14	1.00	14.78	1,121.7	16.33	7.73
15	.31	4.98	617.3	7.18	14.17
16	2.16	1.75	374.4	2.18	23.11
17	.44	1.90	470.1	1.10	18.70
18	.53	2.68	835.9	.18	10.54
19	.27	2.21	592.7	6.38	14.86
20	.90	1.76	383.2	1.68	22.83
21	.66	7.01	615.2	1.10	14.12
22	.75	11.23	1,090.0	16.80	7.99
23	.24	2.36	599.3	6.41	14.70
24	1.12	2.36	407.9	1.83	21.38
25	.18	1.70	150.4	.39	57.80
26	.70	10.36	1,140.4	16.45	7.65
27	.21	2.41	592.1	6.15	14.87
28	.95	2.10	364.1	1.77	23.96
29	.23	3.50	448.9	1.05	19.50
30	.25	2.75	432.7	.76	20.27
31	.52	11.86	625.1	1.05	13.75
32	1.07	9.20	1,144.9	2.03	7.63
(BAG)	.55	5.65	660.3	5.80	13.23
(CALC)	.63	5.71	700.9	6.44	12.46
66	.20	1.05	144.1	.22	60.65
67	2.26	13.33	1,715.1	2.16	5.09
68	.73	3.24	967.3	.97	9.10
69	.33	2.70	948.6	.00	9.30
70	.21	2.46	477.5	1.21	18.41
71	.19	1.69	504.8	1.35	17.47
72	.15	1.96	531.8	4.82	16.57

MODE NO	HC	CO	CO2	NOX	MPG
33	.18	2.78	153.8	.29	55.93
34	.95	8.99	1,125.4	14.19	7.76
35	.21	3.91	518.9	1.77	16.88
36	.27	2.60	408.2	.71	21.48
37	.53	9.76	622.8	1.04	13.87
38	.89	6.30	1,070.6	13.86	8.19
39	.23	4.50	534.7	2.38	16.36
40	.29	2.96	463.1	.77	18.94
41	.16	1.38	151.1	.34	57.73
42	.90	25.45	1,276.6	17.45	6.72
43	.21	4.26	620.3	7.00	14.14
44	1.12	2.95	426.7	1.71	20.41
45	.17	2.15	153.2	.36	56.50
46	1.24	11.38	1,296.5	10.30	6.73
47	.19	5.31	506.3	1.52	17.22
48	.57	4.91	890.5	11.51	9.86
49	.21	4.36	613.8	6.53	14.28
50	1.12	2.22	362.5	1.83	24.02
51	.26	2.68	447.9	1.12	19.59
52	.44	4.60	615.0	1.19	14.23
53	.18	4.13	154.5	.30	54.95
54	.62	6.11	987.1	13.04	8.88
55	.21	2.71	592.7	6.18	14.85
56	.74	2.84	433.7	1.77	20.14
57	.16	1.49	152.4	.38	57.20
58	1.02	12.13	1,152.2	6.96	7.55
59	.20	5.81	500.5	1.36	17.39
60	.57	8.52	985.3	13.11	8.87
61	.21	6.10	629.1	7.16	13.88
62	.63	2.16	379.4	1.93	23.06
63	.20	3.15	425.7	.93	20.58
64	.40	6.78	615.5	1.12	14.14
65	.17	2.59	151.1	.34	57.01

EMISSION RESULTS IN GRAMS PER MILE (PER MINUTE FOR IDLE).
FUEL ECONOMY IN MILES PER GALLON (MINUTES PER GALLON FOR IDLE)

APPENDIX E

LISTING OF MODAL RESULTS ON INDIVIDUAL VEHICLES
WASHINGTON, D.C.

VEHICLE	YEAR	MAKE	MODEL	CID
5027	75	FORD	MAVE	250

MODE NO	HC	CO	CO2	NOX	MPG
01	.19	.92	77.4	.16	111.76
02	1.67	51.61	851.2	5.15	9.46
03	.46	6.89	461.9	1.75	18.72
04	.55	3.32	448.0	1.76	19.51
05	.18	.92	78.7	.14	110.03
06	2.09	24.94	1,032.4	3.85	8.23
07	.69	3.69	423.5	.86	20.57
08	1.01	21.96	275.3	2.84	28.35
09	.39	5.63	444.3	1.75	19.53
10	.40	2.48	621.4	2.38	14.16
11	.19	6.27	492.7	.48	17.64
12	.88	1.46	324.6	2.42	26.92
13	1.22	4.37	343.8	.83	25.03
14	1.15	97.38	586.8	4.98	11.93
15	.35	10.00	558.5	3.63	15.42
16	.57	2.92	343.0	2.34	25.40
17	.60	2.49	400.8	.85	21.83
18	.35	26.41	600.6	3.86	13.79
19	.24	7.82	551.9	3.47	15.71
20	1.30	3.25	380.5	2.03	22.77
21	.71	12.53	324.5	.49	25.62
22	.70	64.69	744.6	5.30	10.46
23	.18	7.82	525.8	3.51	16.47
24	2.33	1.64	342.7	1.61	25.17
25	.21	.61	78.7	.18	110.53
26	.62	49.28	783.7	5.00	10.28
27	.18	7.51	519.3	3.56	16.69
28	1.89	2.80	311.9	1.63	27.54
29	.64	11.28	286.3	.72	29.00
30	.34	4.03	306.4	.79	28.28
31	.52	2.43	349.2	.49	25.02
32	1.05	4.68	587.3	1.09	14.84
(BAG)	.82	19.20	536.0	2.50	15.60
(CALC)	.85	20.93	527.4	2.79	15.76
66	.21	.59	71.9	.13	120.84
67	2.33	10.91	862.3	1.18	10.00
68	1.08	4.81	456.1	.62	19.00
69	.63	1.61	367.5	.64	23.86
70	.28	2.64	378.3	1.16	23.15
71	.21	2.26	456.1	1.24	19.28
72	.16	7.80	474.7	3.94	18.20

MODE NO	HC	CO	CO2	NOX	MPG
33	.17	.61	76.2	.16	114.29
34	.90	41.90	773.0	5.14	10.54
35	.27	2.92	477.3	1.46	18.38
36	1.31	1.16	322.1	.45	27.05
37	.61	2.43	388.8	.64	22.49
38	.78	46.59	677.8	4.73	11.78
39	.24	2.92	503.0	1.70	17.46
40	1.68	1.47	362.8	.61	23.96
41	.17	.61	139.4	.17	63.01
42	1.40	121.24	784.7	5.59	9.05
43	.17	8.44	538.9	3.25	16.06
44	2.42	3.32	364.6	1.61	23.51
45	.19	.92	78.7	.17	109.98
46	1.07	52.69	890.6	3.40	9.08
47	.30	12.53	399.0	1.09	21.15
48	.39	31.95	630.0	3.64	13.02
49	.16	8.75	550.6	3.34	15.71
50	2.18	1.17	365.7	1.39	23.70
51	.90	11.28	308.9	.72	26.94
52	.57	3.47	355.6	.87	24.46
53	.16	.61	78.7	.16	110.79
54	.47	34.15	689.4	4.33	11.92
55	.19	8.44	499.8	3.56	17.27
56	2.04	1.64	331.1	1.94	26.09
57	.19	.92	78.7	.16	109.98
58	1.05	57.77	906.1	3.08	8.87
59	.29	16.27	381.4	1.38	21.76
60	.64	68.93	641.6	4.06	11.80
61	.19	8.76	541.5	3.29	15.96
62	1.67	2.81	305.4	1.64	28.17
63	.59	12.53	308.8	.72	26.86
64	.54	4.54	382.9	.65	22.65
65	.16	.61	319.7	.16	27.64

EMISSION RESULTS IN GRAMS PER MILE (PER MINUTE FOR IDLE).
FUEL ECONOMY IN MILES PER GALLON (MINUTES PER GALLON FOR IDLE)

APPENDIX E

LISTING OF MODAL RESULTS ON INDIVIDUAL VEHICLES
WASHINGTON, D.C.

VEHICLE	YEAR	MAKE	MODEL	CID
5028	75	FORD	TORI	351

MODE NO	HC	CO	CO2	NOX	MPG
01	.14	.28	100.8	.12	87.31
02	2.82	27.96	1,722.1	18.42	5.00
03	.38	4.48	530.7	1.73	16.46
04	1.26	1.51	457.3	.99	19.14
05	.13	.28	105.8	.16	83.23
06	1.44	9.27	1,464.0	6.52	5.98
07	.53	4.47	679.8	1.10	12.89
08	1.25	5.09	1,109.7	7.42	7.91
09	.33	5.04	535.9	1.81	16.29
10	.87	4.46	882.5	9.44	9.94
11	.45	3.36	603.8	2.25	14.53
12	3.64	1.32	288.0	.50	29.43
13	1.23	2.24	441.4	1.18	19.77
14	1.43	61.62	1,066.3	13.13	7.60
15	.41	4.20	664.4	6.38	13.20
16	3.43	1.96	421.8	2.15	20.36
17	1.31	2.24	504.9	1.41	17.31
18	.64	6.72	906.1	11.78	9.66
19	.35	3.92	646.9	6.34	13.56
20	3.27	2.08	384.6	2.27	22.28
21	.76	5.59	473.2	.63	18.32
22	.82	25.32	1,220.9	13.59	7.02
23	.30	3.92	651.0	6.65	13.48
24	4.29	2.48	396.0	1.95	21.46
25	.14	.28	105.8	.12	83.20
26	.78	24.01	1,237.4	14.51	6.94
27	.22	4.20	619.0	5.89	14.17
28	3.30	1.79	320.1	1.36	26.62
29	.70	2.80	449.0	1.18	19.48
30	.77	1.45	371.6	.51	23.58
31	.45	1.12	433.1	.32	20.34
32	.61	2.15	786.1	.61	11.21
(BAG)	1.26	11.26	692.0	5.36	12.43
(CALC)	1.47	13.94	715.6	5.82	11.95
66	.16	.26	100.1	.12	87.91
67	2.56	2.97	1,172.8	.98	7.48
68	1.65	2.11	644.7	.62	13.58
69	.42	2.50	621.5	.90	14.16
70	.20	3.80	498.7	1.55	17.56
71	.23	2.88	533.4	1.59	16.47
72	.14	4.50	557.9	4.49	15.69

MODE NO	HC	CO	CO2	NOX	MPG
33	.09	.42	105.8	.08	83.17
34	1.06	14.61	1,309.7	14.72	6.64
35	.25	4.10	541.2	1.73	16.18
36	2.58	1.61	332.8	.75	25.83
37	.53	3.35	433.1	.32	20.17
38	1.04	14.31	1,155.2	13.27	7.51
39	.27	5.23	565.5	1.99	15.44
40	3.29	1.36	351.4	.76	24.38
41	.13	.56	105.8	.12	82.89
42	1.16	78.40	1,455.7	13.74	5.60
43	.23	5.04	631.0	5.77	13.87
44	3.83	1.98	359.5	1.18	23.68
45	.14	.56	107.0	.16	81.94
46	1.19	15.20	1,496.0	11.38	5.82
47	.18	4.48	518.0	1.57	16.88
48	.55	11.19	1,002.0	11.64	8.69
49	.22	4.20	624.2	5.73	14.05
50	3.41	1.06	286.8	1.35	29.66
51	.91	2.80	433.9	1.02	20.11
52	.93	2.10	486.5	.74	18.01
53	.09	.56	105.8	.12	83.00
54	.72	13.30	1,098.5	13.77	7.91
55	.73	3.92	617.6	5.51	14.17
56	2.85	2.97	361.7	1.95	23.64
57	.19	5.32	104.5	.08	78.26
58	2.51	38.05	1,238.4	4.25	6.79
59	.87	25.30	477.1	.79	17.08
60	2.72	100.73	1,081.3	10.22	7.11
61	1.66	38.37	579.1	3.43	13.76
62	2.80	12.65	256.2	.51	31.15
63	1.75	15.71	461.8	.71	18.04
64	1.07	10.24	446.7	.58	19.04
65	.14	1.68	105.8	.08	81.52

EMISSION RESULTS IN GRAMS PER MILE (PER MINUTE FOR IDLE).
FUEL ECONOMY IN MILES PER GALLON (MINUTES PER GALLON FOR IDLE)

APPENDIX E

LISTING OF MODAL RESULTS ON INDIVIDUAL VEHICLES
WASHINGTON, D.C.

VEHICLE	YEAR	MAKE	MODEL	CID
5029	75	FORD	LTD	400

MODE NO	HC	CO	CO2	NOX	MPG
01	.08	.27	155.2	.22	56.97
02	1.21	10.01	1,599.7	12.44	5.48
03	.10	1.09	720.8	1.59	12.28
04	.19	.00	687.7	.78	12.89
05	.08	.00	153.9	.22	57.59
06	.69	3.63	2,097.5	6.72	4.21
07	.31	.55	685.0	.87	12.92
08	.81	2.85	1,069.3	6.30	8.24
09	.10	.55	695.5	1.52	12.74
10	.67	4.36	973.2	8.16	9.03
11	.18	1.46	719.3	1.64	12.29
12	2.41	.43	516.6	6.25	16.90
13	.36	.27	557.0	1.48	15.89
14	2.43	118.66	1,061.1	7.73	7.07
15	.31	29.94	810.0	4.99	10.34
16	1.78	.64	532.8	2.47	16.45
17	.45	.73	573.8	1.06	15.40
18	.44	18.26	891.2	8.76	9.63
19	.21	4.38	742.7	5.30	11.83
20	2.66	.41	450.9	1.26	19.29
21	.33	.11	620.7	.79	14.27
22	.54	38.28	1,213.6	10.05	6.95
23	.16	3.83	718.8	6.59	12.23
24	3.63	.48	572.1	1.76	15.18
25	.11	.14	156.4	.25	56.55
26	.49	19.93	1,249.7	10.51	6.92
27	.18	3.01	716.2	4.96	12.30
28	3.03	.70	476.1	1.30	18.23
29	.31	.55	519.3	1.34	17.03
30	.13	.35	527.2	.70	16.80
31	.25	.00	625.6	.87	14.17
32	.56	.00	1,205.4	1.81	7.35
(BAG)	.85	9.78	807.9	4.14	10.74
(CALC)	1.00	10.67	827.8	4.84	10.47
66	.17	.49	148.7	.18	59.18
67	2.24	5.87	1,755.5	1.71	5.00
68	.52	3.71	1,235.3	1.43	7.14
69	.64	1.99	620.9	.62	14.17
70	.12	1.74	653.6	1.62	13.51
71	.12	3.56	666.0	1.34	13.20
72	.09	7.36	673.4	3.19	12.95

MODE NO	HC	CO	CO2	NOX	MPG
33	.08	.03	156.4	.24	56.66
34	.70	11.43	1,246.2	9.88	7.00
35	.15	1.82	698.6	1.62	12.64
36	1.44	.52	557.5	.62	15.76
37	.31	.11	615.7	.79	14.39
38	.61	10.77	1,150.8	9.66	7.58
39	.13	3.28	702.1	.17	12.54
40	1.83	.66	630.6	.70	13.92
41	.08	.27	155.2	.29	56.97
42	.94	65.59	1,433.2	11.28	5.76
43	.18	3.56	737.5	5.17	11.93
44	2.88	.48	625.1	1.02	13.97
45	.08	.27	156.4	.29	56.53
46	.70	3.71	1,394.9	7.12	6.32
47	.08	.55	682.9	1.74	12.97
48	.45	15.36	996.5	10.08	8.68
49	.18	3.29	741.4	5.14	11.87
50	3.13	.69	467.4	.85	18.55
51	.26	.27	544.5	1.37	16.26
52	.27	.51	717.3	.81	12.34
53	.08	.14	156.4	.27	56.59
54	.41	16.06	1,194.6	10.15	7.26
55	.18	2.46	730.8	5.01	12.07
56	3.15	.24	557.9	.86	15.62
57	.10	.14	156.4	.31	56.57
58	.67	2.78	1,470.0	6.37	6.01
59	.11	.55	657.6	1.81	13.47
60	.47	19.28	1,038.2	11.28	8.29
61	.18	3.56	742.8	5.14	11.85
62	2.64	.70	501.4	.56	17.37
63	.21	.27	531.9	1.41	16.65
64	.23	.50	713.0	.79	12.42
65	.08	.14	156.4	.31	56.59

EMISSION RESULTS IN GRAMS PER MILE (PER MINUTE FOR IDLE).
FUEL ECONOMY IN MILES PER GALLON (MINUTES PER GALLON FOR IDLE)

APPENDIX E

LISTING OF MODAL RESULTS ON INDIVIDUAL VEHICLES
WASHINGTON, D.C.

VEHICLE	YEAR	MAKE	MODEL	CID
5030	75	MERC	MARQ	460

MODE NO	HC	CO	CO2	NOX	MPG
01	.29	15.38	159.3	.06	48.15
02	2.98	88.81	625.7	16.67	11.45
03	.65	44.36	968.0	1.23	8.53
04	.83	29.98	883.2	.37	9.51
05	.25	11.99	163.1	.06	48.58
06	3.32	135.82	1,065.3	3.03	6.88
07	.99	60.37	956.2	.42	8.41
08	2.25	67.30	506.2	8.36	14.33
09	.59	27.36	853.4	1.38	9.88
10	1.33	31.71	548.0	12.51	14.74
11	.39	21.63	636.6	1.91	13.21
12	1.59	12.26	617.8	.53	13.82
13	.91	21.16	427.3	.91	19.15
14	1.38	30.17	591.3	28.77	13.80
15	.34	8.05	1,052.4	7.67	8.32
16	1.78	9.38	728.4	1.44	11.85
17	1.26	7.74	349.3	1.70	24.28
18	1.06	23.06	572.2	20.75	14.50
19	.29	16.50	880.6	6.54	9.78
20	1.80	9.04	627.8	1.09	13.70
21	1.05	44.58	925.7	.42	8.88
22	1.52	34.97	896.7	29.88	9.27
23	.22	13.68	845.9	5.47	10.22
24	2.49	11.30	773.0	.74	11.11
25	.34	13.96	163.1	.10	47.70
26	1.70	50.85	963.4	30.38	8.46
27	.22	14.53	825.2	6.16	10.45
28	1.80	9.95	574.6	.94	14.89
29	.46	17.79	417.2	.52	19.87
30	.39	23.04	662.2	.27	12.68
31	1.56	67.16	436.7	.26	16.22
32	3.25	199.45	1,218.3	.50	5.75
(BAG)	1.19	35.34	757.0	8.79	10.87
(CALC)	1.21	32.93	766.0	9.01	10.80
66	.58	35.90	134.8	.04	45.97
67	7.22	419.98	1,657.4	.43	3.79
68	4.39	241.74	818.1	.11	7.32
69	2.01	125.97	566.7	.07	11.51
70	.37	28.35	488.8	.38	16.60
71	.24	20.37	528.0	.79	15.82
72	.07	15.48	646.5	3.45	13.22

MODE NO	HC	CO	CO2	NOX	MPG
33	.47	27.59	155.6	.06	44.29
34	2.13	95.81	973.5	15.82	7.84
35	.31	26.54	797.9	1.39	10.55
36	1.41	17.04	629.4	.27	13.43
37	1.81	77.36	667.6	.42	11.16
38	2.13	84.01	846.2	20.89	9.01
39	.31	25.03	870.6	1.60	9.74
40	1.72	20.92	695.1	.25	12.10
41	.47	24.74	163.1	.06	43.63
42	1.66	48.25	933.3	41.55	8.75
43	.25	11.43	921.5	5.40	9.44
44	2.43	15.26	730.7	.81	11.64
45	.56	28.45	159.3	.10	43.14
46	3.15	197.21	681.8	9.08	8.86
47	.46	42.65	869.0	1.07	9.46
48	1.23	30.24	753.4	26.01	11.02
49	.26	15.66	922.8	5.97	9.36
50	1.98	17.02	623.0	.58	13.53
51	.84	23.42	414.7	.44	19.54
52	.99	36.55	964.3	.39	8.66
53	.55	25.31	168.1	.06	42.35
54	1.39	54.43	951.7	23.12	8.52
55	.15	19.91	814.2	4.29	10.49
56	2.57	19.74	616.2	.74	13.54
57	.61	33.88	156.8	.06	41.38
58	2.07	143.91	1,025.6	8.53	7.05
59	.34	34.15	747.2	.76	11.06
60	1.25	34.47	625.4	29.58	12.98
61	.22	17.64	987.0	3.91	8.74
62	2.68	18.33	770.2	.49	10.99
63	.84	26.23	455.2	.36	17.78
64	1.02	33.58	930.8	.38	8.99
65	.52	31.59	163.1	.06	41.40

EMISSION RESULTS IN GRAMS PER MILE (PER MINUTE FOR IDLE).
FUEL ECONOMY IN MILES PER GALLON (MINUTES PER GALLON FOR IDLE)

APPENDIX E

LISTING OF MODAL RESULTS ON INDIVIDUAL VEHICLES
WASHINGTON, D.C.

VEHICLE 5031 YEAR 75 MAKE MERC MODEL COUG CID 351

MODE NO	HC	CO	CO2	NOX	MPG
01	.27	.40	140.3	.44	62.60
02	12.82	10.52	1,604.7	21.05	5.34
03	.46	3.98	542.7	2.91	16.12
04	.47	2.22	583.4	1.19	15.08
05	.27	.11	141.2	.39	62.43
06	5.17	12.61	1,661.9	9.52	5.22
07	.61	4.01	622.1	1.24	14.08
08	1.88	4.64	1,023.3	7.92	8.56
09	.31	2.42	553.1	2.88	15.91
10	1.35	3.60	902.9	10.59	9.72
11	.38	2.93	613.6	4.30	14.33
12	.37	1.07	405.3	1.40	21.74
13	.22	1.67	496.6	1.89	17.75
14	5.53	34.92	1,143.6	17.57	7.29
15	.52	9.35	719.2	11.67	12.06
16	1.15	1.72	450.3	5.00	19.43
17	.40	1.56	516.3	1.88	17.07
18	.57	3.19	909.7	13.77	9.68
19	.31	3.24	697.5	11.64	12.61
20	.48	1.03	431.4	3.31	20.42
21	.56	.46	600.3	2.01	14.72
22	10.30	28.14	1,280.6	18.10	6.53
23	.34	5.91	701.9	9.87	12.46
24	.41	1.87	507.3	4.12	17.35
25	.15	1.02	150.1	.64	58.35
26	7.22	23.28	1,346.7	19.51	6.31
27	.30	4.13	692.1	10.82	12.68
28	.38	1.94	439.1	3.47	20.02
29	.24	1.92	469.1	1.28	18.77
30	.23	3.40	480.3	1.10	18.25
31	.56	5.53	603.9	1.36	14.44
32	1.37	16.14	1,166.1	3.42	7.42
(BAG)	2.59	19.64	743.5	6.97	11.34
(CALC)	2.87	22.06	775.2	7.69	10.83
66	.30	1.10	144.5	.48	60.33
67	3.40	8.27	1,707.9	4.30	5.12
68	1.33	3.89	853.6	1.83	10.27
69	.95	2.17	568.6	1.22	15.43
70	.13	2.00	517.8	2.00	17.02
71	.18	1.94	569.5	2.29	15.48
72	.13	3.33	627.0	7.72	14.03

MODE NO	HC	CO	CO2	NOX	MPG
33	.17	1.58	149.2	.57	58.32
34	9.41	24.77	1,419.8	19.16	5.96
35	.33	6.05	607.1	3.23	14.37
36	.37	2.29	454.4	1.20	19.32
37	.71	6.89	613.1	1.20	14.17
38	9.76	20.14	1,214.3	16.38	6.95
39	.64	8.55	654.1	4.51	13.25
40	.36	2.06	527.9	1.55	16.67
41	.20	2.76	153.2	.56	56.12
42	14.98	93.57	1,392.3	15.83	5.59
43	1.05	25.95	680.1	6.58	12.25
44	1.32	21.93	488.5	2.23	16.83
45	.59	14.65	136.9	.20	54.86
46	5.95	47.59	1,349.2	9.81	6.15
47	1.47	52.28	493.6	1.20	15.29
48	1.48	27.56	954.0	10.29	8.85
49	.95	32.68	674.6	6.23	12.17
50	1.50	24.29	399.6	2.07	20.05
51	1.12	36.86	426.4	.81	18.19
52	1.63	51.00	571.4	.89	13.51
53	.66	9.53	137.6	.19	57.40
54	8.96	39.70	1,145.6	14.18	7.17
55	1.03	26.66	653.5	5.73	12.70
56	1.48	28.75	452.9	1.59	17.65
57	.86	10.17	139.9	.34	55.97
58	8.03	56.79	1,234.5	7.96	6.57
59	1.76	58.16	471.0	.98	15.62
60	6.55	55.89	1,033.9	11.87	7.76
61	1.47	44.93	679.9	6.94	11.75
62	1.67	24.63	412.2	2.26	19.45
63	1.08	29.11	436.9	.99	18.26
64	1.79	55.55	563.4	.88	13.52
65	.59	9.49	140.2	.21	56.54

EMISSION RESULTS IN GRAMS PER MILE (PER MINUTE FOR IDLE).
FUEL ECONOMY IN MILES PER GALLON (MINUTES PER GALLON FOR IDLE)

APPENDIX E

LISTING OF MODAL RESULTS ON INDIVIDUAL VEHICLES
WASHINGTON, D.C.

VEHICLE	YEAR	MAKE	MODEL	CID
5032	75	OLDS	DELT	350

MODE NO	HC	CO	CO2	NOX	MPG
01	.00	.00	80.5	.04	110.28
02	3.82	217.48	1,146.4	1.65	5.91
03	.38	5.02	417.0	.74	20.83
04	.21	.00	374.7	.46	23.64
05	00	.00	69.3	.00	128.13
06	3.12	72.43	1,089.8	1.46	7.31
07	.40	2.23	491.4	.29	17.88
08	2.59	12.34	813.9	1.24	10.54
09	.24	5.02	411.9	.92	21.10
10	1.42	88.06	662.9	1.26	11.01
11	.13	5.21	496.2	.34	17.58
12	.12	.00	247.2	.20	35.85
13	.16	.00	265.8	.63	33.33
14	5.21	326.37	764.4	5.31	6.86
15	1.22	42.26	660.6	2.58	12.14
16	.09	1.30	391.7	.26	22.52
17	.08	3.72	320.3	.17	27.19
18	2.70	223.11	671.0	2.67	8.61
19	.46	56.72	619.3	.83	12.50
20	.01	.41	294.6	.08	30.06
21	.00	4.46	381.6	.14	22.84
22	4.36	98.54	865.0	5.09	8.58
23	.29	36.51	632.6	.68	12.84
24	.12	1.98	457.7	.06	19.24
25	.00	.00	84.2	.07	105.43
26	4.75	314.47	1,012.0	4.60	5.83
27	.24	27.93	569.0	.74	14.46
28	.07	3.93	163.0	.07	46.87
29	.18	9.49	288.3	.59	29.22
30	.11	1.44	305.3	.48	28.83
31	.00	1.11	401.5	.00	22.01
32	.00	.00	706.4	.00	12.56
(BAG)	1.39	95.56	561.5	1.26	12.40
(CALC)	1.48	91.90	577.6	1.61	12.21
66	.04	.00	73.4	.10	120.78
67	1.16	.26	923.0	.76	9.57
68	.56	.05	410.2	.22	21.54
69	.24	.02	443.1	.36	19.99
70	.02	.00	375.0	.94	23.66
71	.07	.00	440.6	1.06	20.13
72	.16	22.06	490.2	.81	16.89

MODE NO	HC	CO	CO2	NOX	MPG
33	.00	.28	85.4	.05	103.41
34	1.47	235.34	1,060.1	2.50	6.18
35	.84	25.86	460.1	.59	17.63
36	.07	4.81	281.0	.10	30.73
37	.00	4.46	391.5	.00	22.27
38	3.08	287.94	847.5	3.25	6.77
39	1.24	35.33	496.2	.91	15.97
40	.19	4.06	344.0	.13	25.28
41	.00	.28	85.4	.07	103.41
42	4.75	327.67	1,020.4	4.48	5.72
43	1.21	48.03	529.6	1.93	14.57
44	.49	10.39	306.7	.42	27.35
45	.00	1.95	87.9	.00	97.62
46	3.31	241.90	1,092.1	2.19	5.98
47	1.16	26.35	409.4	.66	19.53
48	3.73	237.55	772.3	3.55	7.66
49	.77	53.82	584.8	1.93	13.21
50	.32	11.01	287.3	.51	29.04
51	.61	17.34	265.8	.26	30.09
52	.44	4.18	447.1	.41	19.50
53	.00	.56	89.2	.04	98.53
54	2.02	246.61	903.1	3.00	6.84
55	.45	43.70	537.4	1.36	14.61
56	.28	13.37	324.5	.39	25.62
57	.12	5.86	90.4	.00	88.81
58	4.95	211.78	1,046.7	2.12	6.36
59	1.50	33.12	361.3	.63	21.23
60	5.25	327.67	805.5	3.60	6.63
61	1.66	80.13	542.7	2.21	13.17
62	.46	8.63	266.7	.47	31.51
63	.70	27.47	316.0	.18	24.56
64	.64	11.23	426.8	.27	19.88
65	.00	1.11	91.7	.00	95.01

EMISSION RESULTS IN GRAMS PER MILE (PER MINUTE FOR IDLE).
FUEL ECONOMY IN MILES PER GALLON (MINUTES PER GALLON FOR IDLE)

APPENDIX E

LISTING OF MODAL RESULTS ON INDIVIDUAL VEHICLES
WASHINGTON, D.C.

VEHICLE	YEAR	MAKE	MODEL	CID
5033	75	OLDS	CUTL	350

MODE NO	HC	CO	CO2	NOX	MPG
01	.02	.00	68.8	.10	128.95
02	.33	9.13	1,313.5	7.51	6.67
03	.09	.00	396.6	2.03	22.36
04	.11	.00	336.6	1.15	26.34
05	.02	.00	68.8	.08	128.95
06	.31	.00	1,248.9	7.10	7.10
07	.14	.00	488.2	.99	18.16
08	.23	3.54	948.1	4.93	9.30
09	.08	.00	391.6	2.21	22.65
10	.25	4.82	718.2	3.69	12.21
11	.11	.00	469.0	1.57	18.91
12	.09	.00	204.3	.50	43.39
13	.16	.00	298.9	1.77	29.65
14	1.31	100.39	764.6	7.52	9.58
15	.31	2.19	560.1	3.32	15.72
16	.12	.00	291.4	1.14	30.42
17	.13	.00	360.4	1.35	24.60
18	.15	1.55	660.6	5.13	13.37
19	.08	.00	573.1	3.60	15.48
20	.07	.00	262.8	.77	33.74
21	.08	5.45	418.7	.62	20.76
22	.38	19.21	1,047.6	6.03	8.22
23	.07	.00	558.8	3.65	15.87
24	.05	.00	260.7	.92	34.02
25	.01	.00	70.1	.12	126.65
26	.58	18.32	1,082.3	6.53	7.97
27	.06	.00	532.6	3.72	16.65
28	.04	.00	241.0	.90	36.81
29	.04	.00	326.4	1.96	27.18
30	.03	.00	274.4	1.30	32.33
31	.05	.00	413.8	.55	21.44
32	.08	.00	568.6	.49	15.60
(BAG)	.37	10.21	595.4	2.79	14.49
(CALC)	.29	12.76	568.7	3.07	15.05
66	.02	.00	57.5	.09	154.33
67	.35	.01	741.2	.59	11.95
68	.76	.01	619.4	.97	14.27
69	.44	.00	420.5	.72	21.03
70	.10	.00	339.1	2.46	26.15
71	.07	.00	408.1	1.66	21.73
72	.04	.33	464.6	2.62	19.07

MODE NO	HC	CO	CO2	NOX	MPG
33	.01	.25	71.3	.08	123.87
34	.43	28.39	744.0	4.52	11.23
35	.07	.00	440.1	1.67	20.15
36	.07	.00	293.5	.61	30.21
37	.12	.46	423.7	.62	20.89
38	.43	27.84	961.4	4.08	8.81
39	.11	.15	412.9	1.43	21.46
40	.06	.00	257.2	.38	34.48
41	.01	.00	71.3	.06	124.51
42	1.55	106.60	1,015.8	8.29	7.46
43	.37	.00	545.7	3.10	16.23
44	.08	.00	273.7	.76	32.40
45	.02	.25	71.3	.08	123.81
46	.84	37.66	1,167.2	4.75	7.22
47	.07	.51	374.0	1.99	23.66
48	.59	33.08	839.1	4.78	9.93
49	.11	.25	550.8	2.86	16.09
50	.05	.00	245.5	.78	36.13
51	.07	1.06	319.0	1.59	27.66
52	.06	.00	314.0	.58	28.24
53	.01	.53	75.0	.06	117.10
54	.55	37.52	915.9	5.31	9.08
55	.09	.00	530.0	3.08	16.73
56	.05	.00	278.0	.76	31.91
57	.06	3.30	76.2	.06	108.84
58	.63	21.53	1,031.3	9.39	8.31
59	.08	2.72	364.0	1.59	24.08
60	1.02	71.57	882.1	7.11	8.89
61	.38	.25	537.8	2.72	16.45
62	.08	.68	22.9	.79	367.12
63	.30	.62	33.9	1.96	237.78
64	.46	8.02	569.9	.70	15.19
65	.09	.81	72.5	.10	119.95

EMISSION RESULTS IN GRAMS PER MILE (PER MINUTE FOR IDLE).
FUEL ECONOMY IN MILES PER GALLON (MINUTES PER GALLON FOR IDLE)

APPENDIX E

LISTING OF MODAL RESULTS ON INDIVIDUAL VEHICLES
WASHINGTON, D.C.

VEHICLE	YEAR	MAKE	MODEL	CID
5034	75	OLDS	CUST	455

MODE NO	HC	CO	CO2	NOX	MPG
01	.01	.00	80.8	.00	109.88
02	.63	16.85	1,753.8	14.42	4.98
03	.14	4.48	510.6	1.43	17.13
04	.10	.11	432.4	.54	20.50
05	.02	.03	84.6	.00	104.84
06	.62	29.89	1,727.9	4.74	4.99
07	.11	1.78	608.5	.53	14.51
08	.41	14.67	1,127.3	9.58	7.70
09	.08	.06	497.6	1.43	17.82
10	.19	1.50	926.4	9.76	9.55
11	.08	.00	578.0	2.41	15.35
12	.08	.05	343.4	.83	25.82
13	.13	2.75	425.1	1.05	20.65
14	1.01	80.02	1,042.9	10.97	7.57
15	.33	2.81	727.0	6.88	12.11
16	.07	.10	382.6	2.10	23.17
17	.08	.12	458.6	1.53	19.33
18	.29	53.44	831.8	8.50	9.68
19	.06	.80	687.1	6.50	12.89
20	.04	.04	197.4	1.70	44.92
21	.19	6.89	480.7	.60	18.03
22	.75	113.58	1,181.4	13.26	6.51
23	.05	.21	681.8	7.25	13.00
24	.16	.63	306.2	1.37	28.84
25	.02	.12	94.7	.04	93.51
26	.72	114.86	1,356.0	13.49	5.76
27	.04	.21	668.1	6.88	13.27
28	.03	.15	355.1	1.35	24.97
29	.36	9.30	407.1	1.17	20.99
30	.11	1.23	347.7	.39	25.36
31	.25	6.66	460.3	.23	18.82
32	.35	7.26	749.6	.00	11.64
(BAG)	.51	26.36	720.8	4.88	11.62
(CALC)	.50	29.91	712.6	5.56	11.66
66	.11	.01	83.1	.04	106.41
67	2.06	.74	1,218.8	.44	7.23
68	.39	1.40	782.5	.44	11.29
69	.24	.04	930.5	.44	9.53
70	.09	.01	788.2	1.39	11.25
71	.05	.01	524.2	1.99	16.92
72	.03	.02	608.5	6.26	14.58

MODE NO	HC	CO	CO2	NOX	MPG
33	.06	2.95	85.8	.00	97.97
34	.66	74.77	1,237.5	13.75	6.54
35	.06	.20	576.2	2.46	15.39
36	.05	.40	357.8	.58	24.75
37	.70	15.76	434.8	.08	19.22
38	.84	74.57	1,245.1	7.23	6.50
39	.08	.59	558.6	2.28	15.85
40	.07	.65	329.0	.64	26.88
41	.02	.80	93.5	.00	93.66
42	1.61	129.04	1,422.5	14.04	5.44
43	.11	.65	674.9	6.88	13.12
44	.05	.42	278.6	1.53	31.76
45	.08	3.66	90.9	.00	91.64
46	2.06	100.98	1,434.6	10.71	5.54
47	.37	11.28	453.6	1.17	18.78
48	.68	68.35	1,043.7	7.89	7.69
49	.09	1.38	677.6	7.06	13.05
50	.08	.68	270.0	1.58	32.71
51	1.06	20.13	376.2	.98	21.58
52	1.11	9.47	408.0	.42	20.81
53	.06	2.38	90.9	.00	93.62
54	1.04	112.72	1,042.6	9.53	7.25
55	.06	.21	700.9	7.81	12.65
56	.12	2.44	344.6	1.20	25.44
57	.29	6.79	85.8	.00	91.15
58	3.03	121.45	1,369.4	8.02	5.65
59	.68	17.70	469.1	1.54	17.78
60	1.27	82.27	1,055.3	11.28	7.46
61	.22	.94	733.8	7.63	12.06
62	.09	.72	325.2	1.11	27.18
63	.99	36.83	443.2	1.05	17.60
64	.92	8.19	453.8	.28	18.90
65	.17	3.52	89.6	.00	92.79

EMISSION RESULTS IN GRAMS PER MILE (PER MINUTE FOR IDLE).
FUEL ECONOMY IN MILES PER GALLON (MINUTES PER GALLON FOR IDLE)

APPENDIX E

LISTING OF MODAL RESULTS ON INDIVIDUAL VEHICLES
WASHINGTON, D.C.

VEHICLE 5035 | YEAR 75 | MAKE PLYM | MODEL FURY | CID 318

MODE NO	HC	CO	CO2	NOX	MPG
01	.01	.00	144.3	.16	61.51
02	.36	1.26	1,630.5	16.09	5.43
03	.08	.00	419.9	3.29	21.12
04	.07	.00	546.5	2.40	16.23
05	.01	.00	145.6	.20	60.97
06	.19	.00	1,755.7	9.09	5.05
07	.08	.00	602.4	1.26	14.72
08	.18	.00	1,106.8	7.90	8.01
09	.07	.47	409.8	2.43	21.60
10	.23	.00	781.9	14.03	11.34
11	.12	.00	489.8	4.21	18.10
12	.06	.00	327.2	1.79	27.11
13	.05	.00	389.5	1.73	22.77
14	.53	9.14	1,081.5	19.20	8.08
15	.12	.03	622.7	.23	14.24
16	.06	.03	345.7	2.28	25.65
17	.04	.04	464.0	2.14	19.12
18	.11	.03	802.9	16.33	11.04
19	.06	.03	576.2	6.36	15.39
20	.05	.00	298.6	2.15	29.71
21	.03	.00	587.3	.79	15.11
22	.12	.12	1,046.2	18.76	8.47
23	.05	.03	545.9	6.59	16.25
24	.04	.00	345.5	2.15	25.68
25	.01	.00	151.9	.31	58.44
26	.11	.05	1,153.4	19.81	7.69
27	.04	.00	549.9	7.38	16.13
28	.03	.00	298.1	1.75	29.76
29	.02	.41	412.3	1.57	21.49
30	.02	.00	413.0	1.02	21.49
31	.03	.00	587.3	.79	15.11
32	.07	.00	1,122.0	1.51	7.90
(BAG)	.09	.31	623.1	7.02	14.22
(CALC)	.09	.30	676.9	7.82	13.09
66	.02	.02	128.3	.18	69.16
67	.28	.36	1,628.5	1.99	5.44
68	.12	.10	823.9	.70	10.76
69	.07	.07	555.7	.66	15.96
70	.76	.00	357.1	4.37	24.69
71	.09	.01	419.4	3.61	21.15
72	.08	.01	476.2	7.59	18.62

MODE NO	HC	CO	CO2	NOX	MPG
33	.01	.00	145.6	.26	60.97
34	.12	.06	1,242.6	15.39	7.14
35	.04	.00	464.0	4.41	19.12
36	.02	.00	324.7	1.35	27.33
37	.03	.12	582.3	.79	15.23
38	.13	.06	1,196.4	15.82	7.41
39	.04	.04	455.4	3.12	19.48
40	.04	.00	813.9	1.71	10.90
41	.01	.03	145.6	.20	60.95
42	.23	.91	1,339.7	21.31	6.61
43	.04	.06	556.4	6.36	15.94
44	.04	.00	367.5	1.53	24.14
45	.01	.38	146.8	.27	60.22
46	.14	.79	1,386.5	12.14	6.39
47	.04	1.16	414.9	2.43	21.29
48	.14	.31	916.7	14.66	9.67
49	.05	.00	484.2	6.21	18.32
50	.03	.00	295.7	1.39	30.00
51	.01	.00	407.4	1.41	21.78
52	.02	.00	555.9	1.18	15.96
53	.01	.00	144.3	.20	61.51
54	.08	.00	1,089.3	17.42	8.14
55	.06	.03	520.9	7.98	17.03
56	.04	.00	367.5	1.53	24.14
57	.01	.00	146.8	.24	60.46
58	.11	.00	1,265.7	11.60	7.01
59	.04	.00	376.9	4.30	23.54
60	.17	.12	1,019.6	19.11	8.69
61	.04	.03	549.9	5.61	16.13
62	.03	.00	283.3	1.11	31.32
63	.03	.12	402.2	1.80	22.05
64	.03	.00	528.2	1.44	16.80
65	.01	.00	154.4	2.73	57.48

EMISSION RESULTS IN GRAMS PER MILE (PER MINUTE FOR IDLE).
FUEL ECONOMY IN MILES PER GALLON (MINUTES PER GALLON FOR IDLE)

APPENDIX E

LISTING OF MODAL RESULTS ON INDIVIDUAL VEHICLES
WASHINGTON, D.C.

VEHICLE	YEAR	MAKE	MODEL	CID
5036	75	PLYM	VALI	225

MODE NO	HC	CO	CO2	NOX	MPG
01	.35	5.85	67.9	.00	113.59
02	6.02	40.42	1,056.3	13.51	7.79
03	.41	10.26	295.8	2.67	28.33
04	.49	13.33	278.7	.86	29.47
05	.32	5.94	74.1	.00	105.21
06	.71	5.33	1,334.9	7.88	6.59
07	.17	3.89	442.0	1.58	19.78
08	.52	5.12	672.0	6.88	13.02
09	.04	.35	297.9	2.60	29.73
10	.16	.34	507.5	12.48	17.45
11	.05	.19	324.4	9.20	27.32
12	.66	6.84	155.5	4.13	52.73
13	.07	2.24	296.8	.72	29.53
14	1.13	31.57	699.0	10.74	11.80
15	.08	.24	424.7	9.12	20.86
16	.63	3.97	199.6	6.56	42.71
17	.06	.61	303.6	2.36	29.12
18	.14	.00	589.2	16.62	15.05
19	.04	.00	406.0	12.15	21.85
20	.43	3.60	200.8	5.28	42.71
21	.03	2.17	448.6	.77	19.63
22	1.95	38.01	667.4	11.19	12.10
23	.06	.00	390.6	10.96	22.71
24	.69	7.00	171.5	4.72	48.07
25	.23	5.79	89.5	.04	89.40
26	1.78	19.17	742.7	15.79	11.40
27	.05	.19	393.3	12.09	22.54
28	.55	4.66	166.6	4.90	50.54
29	.02	.45	274.7	.99	32.22
30	.49	15.63	173.4	.59	44.49
31	.05	3.34	407.5	.50	21.49
32	.62	26.93	524.8	.38	15.59
(BAG)	.64	7.84	425.1	7.94	20.20
(CALC)	.61	9.23	427.4	8.47	20.00
66	.36	7.05	54.9	.00	132.33
67	4.70	76.64	698.9	.00	10.63
68	.06	.17	596.9	.33	14.85
69	.05	.35	268.9	.36	32.92
70	.03	.06	240.4	1.71	36.90
71	.04	.08	293.3	6.07	30.23
72	.05	.09	366.1	13.76	24.22

MODE NO	HC	CO	CO2	NOX	MPG
33	.22	5.62	95.1	.01	84.83
34	1.98	34.57	721.6	10.89	11.34
35	.05	.20	302.3	6.01	29.31
36	.51	10.36	150.0	2.06	52.86
37	.06	2.28	481.1	.49	18.30
38	.57	11.35	711.9	11.19	12.13
39	.03	.39	299.0	5.11	29.62
40	.63	12.50	167.8	1.76	46.86
41	.22	5.48	99.1	.02	81.88
42	3.60	71.80	798.5	11.73	9.61
43	.09	.34	396.9	9.54	22.31
44	.76	7.68	156.1	3.05	52.05
45	.26	7.00	99.7	.03	79.62
46	2.40	14.34	853.5	12.96	10.04
47	.05	.34	291.7	1.74	30.35
48	.16	.24	619.9	18.59	14.29
49	.05	.38	382.7	11.72	23.14
50	.57	5.15	141.7	3.61	58.56
51	.01	.37	259.8	.97	34.09
52	.52	19.61	245.5	.60	31.81
53	.18	4.82	118.9	.03	69.90
54	.40	4.65	679.6	16.91	12.89
55	.04	.00	381.8	14.35	23.23
56	.61	6.56	160.2	3.03	51.48
57	.19	5.08	109.9	.12	74.94
58	.64	11.11	778.1	12.27	11.12
59	.06	.54	298.3	1.75	29.65
60	.21	.55	696.0	20.35	12.72
61	.02	.13	368.0	10.35	24.10
62	.62	6.05	118.3	1.98	68.42
63	.00	.41	248.9	1.20	35.57
64	.64	21.30	236.1	.59	32.68
65	.13	5.05	47.8	.06	158.26

EMISSION RESULTS IN GRAMS PER MILE (PER MINUTE FOR IDLE).
FUEL ECONOMY IN MILES PER GALLON (MINUTES PER GALLON FOR IDLE)

APPENDIX E

LISTING OF MODAL RESULTS ON INDIVIDUAL VEHICLES
WASHINGTON, D.C.

VEHICLE	YEAR	MAKE	MODEL	CID
5037	75	PONT	GRAN	400

MODE NO	HC	CO	CO2	NOX	MPG
01	.15	.06	115.1	.28	76.77
02	1.66	10.02	1,339.8	8.20	6.52
03	.35	1.95	502.0	3.24	17.53
04	.48	.72	515.6	2.12	17.12
05	.13	.08	120.9	.23	73.11
06	1.36	.71	1,201.8	4.79	7.35
07	.61	.98	631.1	2.23	13.98
08	.82	1.22	771.8	4.79	11.43
09	.38	.96	499.3	3.21	17.68
10	.58	1.75	683.9	4.91	12.89
11	.38	1.44	549.1	3.45	16.06
12	.80	.81	345.8	1.06	25.39
13	.65	.69	352.4	.97	24.96
14	2.40	42.65	812.6	5.34	10.00
15	.77	38.47	659.9	5.36	12.28
16	.58	3.91	404.9	2.41	21.49
17	.71	2.49	352.9	.98	24.72
18	.59	5.07	694.3	6.13	12.60
19	.43	4.11	645.2	6.35	13.59
20	.64	1.32	366.3	1.56	23.96
21	.33	.81	516.1	.77	17.12
22	1.42	39.62	937.7	9.06	8.83
23	.39	4.12	623.3	5.87	14.06
24	.53	2.31	444.2	2.45	19.74
25	.06	.39	133.0	.42	66.36
26	1.15	24.74	1,049.6	10.61	8.12
27	.36	2.62	616.7	5.88	14.27
28	.36	.90	374.6	2.13	23.53
29	.19	.54	365.2	1.45	24.21
30	.15	.77	383.0	1.45	23.07
31	.19	1.13	518.7	.60	17.03
32	.40	.66	961.8	.77	9.20
(BAG)	.70	14.89	646.2	4.40	13.21
(CALC)	.71	11.29	647.9	4.65	13.28
66	.30	.06	112.5	.03	78.21
67	8.42	4.63	1,322.5	1.67	6.54
68	3.99	2.75	674.8	.84	12.83
69	2.37	2.66	514.3	.63	16.87
70	.64	1.08	406.1	1.50	21.65
71	.39	1.26	482.6	1.93	18.27
72	.30	.35	540.9	5.20	16.36

MODE NO	HC	CO	CO2	NOX	MPG
33	.04	.08	122.9	.17	72.09
34	.84	10.83	1,070.2	8.32	8.14
35	.27	.93	509.1	3.38	17.35
36	.34	.55	367.3	1.03	24.04
37	.25	.45	525.2	.62	16.85
38	.80	12.31	941.2	7.17	9.21
39	.33	6.46	565.6	4.07	15.38
40	.39	1.17	431.7	1.20	20.41
41	.07	.19	129.0	.35	68.54
42	2.86	82.40	1,038.9	7.31	7.53
43	.46	9.12	638.1	6.02	13.57
44	.47	4.04	427.3	1.96	20.39
45	.06	.51	127.6	.27	69.05
46	1.05	12.68	1,206.1	8.93	7.22
47	.24	1.59	444.6	3.13	19.82
48	.64	9.06	807.2	7.21	10.77
49	.40	3.97	629.5	5.90	13.93
50	.48	1.45	369.8	1.85	23.75
51	.28	2.33	375.2	1.46	23.37
52	.26	6.07	535.3	2.10	16.26
53	.04	1.64	126.9	.21	68.50
54	.83	15.97	955.2	8.19	9.03
55	.38	2.09	591.7	5.74	14.88
56	.41	1.17	410.2	1.69	21.47
57	.04	.14	127.6	.21	69.38
58	1.26	23.87	1,091.9	7.29	7.83
59	.22	5.02	421.6	2.44	20.63
60	1.59	36.15	854.1	7.09	9.69
61	.47	17.45	642.8	6.48	13.21
62	.40	4.06	372.5	1.76	23.34
63	.23	3.78	376.6	1.54	23.16
64	.23	7.90	514.0	1.25	16.83
65	.03	.94	123.0	.18	71.28

EMISSION RESULTS IN GRAMS PER MILE (PER MINUTE FOR IDLE).
FUEL ECONOMY IN MILES PER GALLON (MINUTES PER GALLON FOR IDLE)

APPENDIX E

LISTING OF MODAL RESULTS ON INDIVIDUAL VEHICLES
WASHINGTON, D.C.

VEHICLE	YEAR	MAKE	MODEL	CID
5038	75	PONT	LEMA	350

MODE NO	HC	CO	CO2	NOX	MPG
01	.44	10.44	114.6	.11	67.06
02	1.68	32.87	1,166.2	8.66	7.25
03	.63	20.04	339.1	.85	23.82
04	.97	25.92	441.1	.23	18.30
05	.37	7.76	117.7	.05	67.73
06	1.40	38.57	1,260.3	6.01	6.69
07	1.25	31.77	481.1	.84	16.59
08	.75	17.23	806.9	3.91	10.61
09	.39	15.28	356.6	.81	23.24
10	.27	.94	675.6	6.79	13.09
11	.22	5.75	373.9	1.06	23.13
12	.59	12.52	249.6	.38	32.73
13	.17	7.03	354.8	.85	24.22
14	1.84	40.67	858.3	9.08	9.56
15	.37	11.39	448.0	3.24	19.00
16	.65	3.61	255.8	.89	33.68
17	.08	1.20	349.2	1.49	25.26
18	.82	21.40	681.8	7.58	12.36
19	.16	6.19	441.1	3.14	19.66
20	.16	1.53	269.8	.69	32.55
21	.11	3.36	524.4	.42	16.74
22	1.49	53.14	825.3	7.90	9.71
23	.10	2.84	448.9	3.14	19.56
24	.26	3.26	294.5	.93	29.54
25	.02	.82	128.4	.17	68.42
26	1.05	35.55	863.7	9.20	9.61
27	.08	2.05	446.8	3.26	19.71
28	.17	1.78	259.4	.87	33.78
29	.03	.60	353.6	1.07	25.03
30	.16	7.87	343.3	.43	24.92
31	.65	26.16	498.1	.44	16.39
32	1.79	59.74	939.2	.94	8.54
(BAG)	.66	20.93	532.0	3.23	15.65
(CALC)	.68	20.41	528.4	3.39	15.77
66	.62	18.16	102.4	.07	66.80
67	6.22	144.45	1,296.2	.93	5.75
68	2.44	48.09	681.4	.39	11.60
69	1.26	24.03	511.4	.33	16.04
70	.13	.05	349.4	1.48	25.36
71	.11	1.61	369.8	1.08	23.81
72	.05	.76	438.6	2.80	20.17

MODE NO	HC	CO	CO2	NOX	MPG
33	.32	8.24	120.9	.14	65.84
34	1.09	39.85	924.8	7.88	8.95
35	.23	10.35	370.4	1.20	22.91
36	.53	20.48	276.4	.67	28.61
37	1.17	37.31	508.6	.55	15.54
38	1.06	33.35	871.6	6.99	9.57
39	.48	18.91	359.1	1.42	22.74
40	.72	26.90	334.2	.62	23.43
41	.36	8.81	122.7	.17	64.49
42	2.53	89.09	934.6	8.21	8.19
43	.33	14.22	427.2	2.34	19.69
44	.51	9.21	307.8	.68	27.40
45	.26	7.39	125.2	.17	64.51
46	.82	23.14	1,075.2	8.41	7.96
47	.40	20.89	354.5	1.04	22.84
48	.35	5.64	711.8	7.37	12.29
49	.16	10.97	436.5	2.32	19.54
50	.54	7.08	247.2	.57	34.14
51	.10	6.74	337.1	.40	25.50
52	.87	28.18	466.6	.31	17.28
53	.35	9.56	119.6	.08	65.39
54	1.03	32.00	784.1	7.26	10.59
55	.09	1.70	441.7	2.56	19.96
56	.56	8.80	345.5	.61	24.58
57	.33	9.85	121.5	.16	64.33
58	1.30	37.89	952.1	5.81	8.73
59	.62	28.64	349.6	.96	22.38
60	1.74	62.04	754.5	6.64	10.35
61	.42	18.95	428.7	2.39	19.30
62	.81	10.27	237.4	.41	34.65
63	.17	11.00	344.2	.67	24.52
64	.89	32.20	459.8	.53	17.29
65	.37	11.44	119.1	.14	64.21

EMISSION RESULTS IN GRAMS PER MILE (PER MINUTE FOR IDLE).
FUEL ECONOMY IN MILES PER GALLON (MINUTES PER GALLON FOR IDLE)

APPENDIX E

LISTING OF MODAL RESULTS ON INDIVIDUAL VEHICLES
WASHINGTON, D.C.

VEHICLE	YEAR	MAKE	MODEL	CID
5039	75	PONT	GRAN	400

MODE NO	HC	CO	CO2	NOX	MPG
01	.48	6.44	140.7	.16	58.27
02	1.63	25.35	1,661.1	21.87	5.20
03	.66	20.81	391.7	.92	20.81
04	1.58	34.57	514.4	.43	15.47
05	.45	5.19	151.5	.29	55.13
06	1.41	17.19	1,647.3	11.55	5.28
07	1.44	19.47	621.9	.81	13.50
08	.49	3.08	1,064.5	13.22	8.28
09	.58	14.83	416.6	1.31	20.09
10	.28	2.83	904.2	12.85	9.75
11	.10	.06	473.2	3.25	18.74
12	.41	2.66	270.8	.75	32.13
13	.16	2.42	410.2	.78	21.41
14	1.90	82.70	1,150.1	15.10	6.90
15	.13	5.87	578.3	6.65	15.09
16	1.08	7.10	264.7	1.59	31.78
17	.08	1.35	462.5	2.42	19.09
18	.60	26.73	883.5	12.14	9.57
19	.05	1.66	599.4	8.31	14.74
20	.52	8.07	306.6	1.66	27.65
21	21.61	18.43	709.7	1.62	10.99
22	1.76	107.99	1,101.3	13.46	6.95
23	.07	1.17	596.0	8.86	14.84
24	.96	13.62	317.0	1.44	25.99
25	.41	9.15	147.7	.44	54.33
26	1.39	74.30	1,175.9	16.00	6.84
27	.05	.13	600.1	8.73	14.78
28	.54	7.25	275.1	1.29	30.79
29	.15	4.58	367.0	1.17	23.69
30	.69	17.15	377.0	.69	21.85
31	1.40	28.96	577.1	.90	14.15
32	2.88	54.81	1,108.4	1.80	7.37
(BAG)	.70	28.68	626.1	6.06	13.18
(CALC)	.76	28.39	675.7	7.05	12.28
66	.60	12.88	122.8	.18	61.26
67	6.85	89.60	1,547.9	2.39	5.18
68	4.25	114.43	733.5	.76	9.57
69	2.91	87.84	463.3	.43	14.53
70	1.02	23.91	347.5	1.01	22.86
71	.04	1.10	442.4	1.47	19.98
72	.03	.17	517.8	5.81	17.13

MODE NO	HC	CO	CO2	NOX	MPG
33	.39	6.62	160.5	.33	51.58
34	.32	15.58	1,256.3	18.91	6.92
35	.03	.59	441.1	2.35	20.07
36	.65	15.22	316.3	.61	25.93
37	1.65	35.66	610.5	1.09	13.21
38	.31	14.36	1,195.8	17.65	7.27
39	.04	.22	470.2	3.41	18.85
40	.79	18.28	385.9	.76	21.27
41	.41	9.12	157.2	.38	51.36
42	2.52	150.10	1,269.2	13.34	5.86
43	.10	5.72	595.3	7.64	14.68
44	.91	14.25	328.2	1.34	25.11
45	.43	8.47	153.0	.35	52.95
46	.29	5.81	1,429.3	25.31	6.16
47	.04	4.94	419.0	.64	20.79
48	1.20	75.97	920.2	11.88	8.50
49	.10	4.24	580.8	7.52	15.10
50	.70	10.13	268.3	1.24	30.99
51	.31	9.07	379.1	1.01	22.51
52	1.37	43.81	529.4	.78	14.73
53	.42	10.50	147.0	.31	53.85
54	.81	40.47	1,048.7	17.47	7.96
55	.04	1.42	583.2	7.46	15.15
56	.74	13.86	349.1	1.49	23.78
57	.45	10.89	150.4	.36	52.55
58	.30	9.44	1,247.9	20.94	7.02
59	.34	15.70	430.9	1.31	19.43
60	1.87	121.41	976.4	9.88	7.56
61	.16	14.69	589.4	6.63	14.48
62	.90	11.34	256.5	1.05	32.02
63	.42	19.15	363.4	.95	22.48
64	1.40	45.23	518.7	1.03	14.93
65	.43	12.85	138.3	.28	55.53

EMISSION RESULTS IN GRAMS PER MILE (PER MINUTE FOR IDLE).
FUEL ECONOMY IN MILES PER GALLON (MINUTES PER GALLON FOR IDLE)

APPENDIX E

LISTING OF MODAL RESULTS ON INDIVIDUAL VEHICLES
WASHINGTON, D.C.

VEHICLE	YEAR	MAKE	MODEL	CID
5040	76	MERC	CAPR	140

MODE NO	HC	CO	CO2	NOX	MPG	MODE NO	HC	CO	CO2	NOX	MPG
01	.03	.44	149.9	.04	58.92	33	.03	.91	85.3	.06	102.27
02	5.31	22.62	740.3	9.00	11.19	34	1.84	10.63	663.8	10.47	12.93
03	.52	5.53	471.4	1.20	18.42	35	.28	1.52	386.6	1.22	22.76
04	.29	6.27	489.2	.54	17.75	36	.15	1.68	340.9	.54	25.80
05	.04	.62	82.8	.06	105.85	37	.17	7.31	411.9	.37	20.94
06	.89	18.90	716.7	4.34	11.84	38	1.30	6.98	576.8	9.71	14.99
07	.39	12.53	650.6	.37	13.21	39	.39	2.59	438.5	1.29	20.00
08	1.73	6.31	446.2	5.10	19.23	40	.21	1.99	364.1	.23	24.12
09	.28	6.26	320.2	1.20	26.82	41	.05	.21	41.4	.04	211.98
10	1.10	3.50	371.4	5.21	23.33	42	1.88	16.76	594.1	11.58	14.17
11	11.37	1.71	426.3	1.44	19.08	43	.66	2.40	490.2	4.44	17.89
12	.24	1.52	361.6	.41	24.33	44	.42	1.76	315.3	.83	27.79
13	.16	5.98	241.4	.37	35.32	45	.06	.27	43.9	.04	199.58
14	.53	13.98	478.6	8.58	17.67	46	.94	8.71	289.4	6.65	29.00
15	.34	8.56	536.6	5.06	16.10	47	.14	5.02	440.5	.78	19.77
16	.47	1.66	410.6	1.20	21.40	48	.63	3.75	503.1	8.56	17.37
17	.24	1.52	271.4	1.24	32.33	49	.29	2.03	486.2	4.13	18.10
18	.46	1.96	283.9	7.89	30.77	50	.40	1.45	364.9	.83	24.09
19	.34	2.42	503.4	4.33	17.46	51	.14	5.98	246.5	.37	34.62
20	.39	1.69	321.4	.89	27.28	52	.16	7.50	396.1	.35	21.73
21	.15	8.00	432.2	.37	19.93	53	.04	.27	53.9	.06	163.16
22	.86	9.81	604.4	10.01	14.25	54	1.10	5.84	577.2	9.88	15.04
23	.34	1.86	467.7	4.22	18.81	55	.31	1.77	423.0	4.09	20.80
24	.37	2.02	383.9	.33	22.96	56	.17	2.02	349.3	.03	25.14
25	.05	.24	52.7	.06	166.87	57	.04	.24	55.2	.06	159.51
26	1.80	7.21	693.6	11.15	12.49	58	1.12	18.81	698.0	6.70	12.14
27	.35	1.94	454.5	4.28	19.35	59	.14	4.96	445.7	.90	19.55
28	.23	1.57	318.3	.45	27.61	60	.89	5.35	500.8	10.61	17.33
29	.13	5.70	261.7	.41	32.74	61	.29	2.54	473.0	4.13	18.57
30	.10	8.19	371.9	.29	23.05	62	.45	1.47	339.8	.94	25.83
31	.15	8.00	417.0	.37	20.64	63	.13	6.94	254.1	.34	33.44
32	.21	13.43	832.7	.58	10.38	64	.10	6.48	363.0	.34	23.76
						65	.03	.24	53.9	.04	163.38
(BAG)	.64	5.98	457.0	4.02	18.95						
(CALC)	.60	4.92	455.3	4.23	19.09						
66	.05	.77	81.4	.08	107.25						
67	.64	15.07	779.6	.55	11.02						
68	.21	13.46	820.1	.71	10.54						
69	.17	10.38	[illegible]39.9	.37	19.43						
70	.11	7.78	336.3	.64	25.44						
71	.21	1.45	327.6	.97	26.85						
72	.28	1.67	389.6	3.76	22.57						

EMISSION RESULTS IN GRAMS PER MILE (PER MINUTE FOR IDLE).
FUEL ECONOMY IN MILES PER GALLON (MINUTES PER GALLON FOR IDLE)

APPENDIX E

LISTING OF MODAL RESULTS ON INDIVIDUAL VEHICLES
WASHINGTON, D.C.

VEHICLE 5041 YEAR 75 MAKE DATS MODEL B210 CID 085

MODE NO	HC	CO	CO2	NOX	MPG
01	.08	.83	49.9	.16	172.70
02	3.44	42.90	546.7	8.08	14.20
03	.62	5.02	250.0	1.21	34.16
04	.35	1.99	212.5	.58	40.95
05	.16	1.39	26.6	.01	303.63
06	2.02	11.09	659.9	3.76	12.98
07	.99	5.57	301.4	.87	28.33
08	2.80	10.90	464.5	4.02	18.09
09	.59	3.34	230.2	1.25	37.40
10	1.31	9.36	369.0	5.82	22.88
11	.4[illegible]	4.09	220.4	3.47	38.77
12	.33	1.75	141.2	1.13	61.23
13	.30	5.58	143.6	1.10	57.81
14	1.81	89.39	371.7	5.07	17.13
15	1.24	12.07	302.0	6.63	27.32
16	.52	2.27	172.9	2.51	49.83
17	.46	2.23	178.0	3.17	48.52
18	1.25	19.28	371.1	9.95	21.89
19	.82	3.07	228.4	7.16	37.64
20	.36	2.07	136.1	1.99	63.19
21	.41	7.80	250.4	.64	33.63
22	2.87	75.74	438.8	6.53	15.65
23	.82	3.63	277.6	7.20	31.04
24	.55	1.97	129.9	1.30	65.89
25	.11	2.79	28.0	.03	271.63
26	2.63	65.85	471.0	9.27	15.23
27	.76	2.79	279.0	7.38	31.06
28	.47	1.78	135.5	1.44	63.51
29	.40	5.02	140.8	1.06	59.21
30	.46	3.61	151.2	.56	56.08
31	.39	4.45	264.6	.64	32.54
32	.84	6.42	357.0	.53	24.00
(BAG)	1.27	17.21	307.8	4.92	26.20
(CALC)	1.07	19.93	292.4	4.47	27.13
66	.10	.53	29.0	.01	295.12
67	1.50	8.67	423.2	.33	20.10
68	.84	8.72	282.5	.22	29.70
69	.73	8.01	196.7	.31	41.95
70	.86	.92	184.8	2.03	46.97
71	.88	1.48	209.2	4.82	41.41
72	1.18	1.90	273.9	8.95	31.63

MODE NO	HC	CO	CO2	NOX	MPG
33	.18	2.51	28.0	.03	273.47
34	2.36	215.77	505.8	8.19	10.41
35	.58	2.97	198.7	3.56	43.26
36	.31	2.67	141.7	.77	60.45
37	.41	5.57	267.4	.72	31.99
38	2.12	25.36	506.1	7.50	16.06
39	.56	7.46	197.8	3.22	42.01
40	.37	2.70	153.7	.66	55.79
41	.10	5.03	28.0	.01	245.49
42	3.54	122.37	454.0	4.81	13.49
43	.88	7.00	285.1	6.94	29.69
44	.49	2.96	134.8	1.07	62.96
45	.11	1.95	28.0	.01	283.06
46	2.83	27.55	512.8	5.68	15.70
47	.38	4.46	218.8	1.13	39.10
48	1.38	21.68	400.7	8.74	20.21
49	.78	3.07	284.4	7.22	30.43
50	.51	1.77	136.3	1.03	63.11
51	.35	4.46	138.0	.69	60.75
52	.51	4.18	136.7	.40	61.27
53	.10	1.67	28.0	.01	287.4[illegible]
54	1.84	17.73	436.4	11.72	18.[illegible]8
55	.72	1.95	265.3	7.05	32.30
56	.47	2.47	129.7	1.30	65.75
57	.11	1.39	30.1	.01	272.55
58	4.11	19.89	566.7	4.74	14.52
59	.47	4.46	213.2	1.43	40.04
60	1.96	53.54	438.5	5.52	16.78
61	.82	3.07	270.1	6.83	31.98
62	.51	2.15	130.8	.87	65.38
63	.36	5.58	140.8	.77	58.91
64	.46	3.05	143.7	.39	59.21
65	.10	.55	28.0	.01	304.77

EMISSION RESULTS IN GRAMS PER MILE (PER MINUTE FOR IDLE).
FUEL ECONOMY IN MILES PER GALLON (MINUTES PER GALLON FOR IDLE)

APPENDIX E

LISTING OF MODAL RESULTS ON INDIVIDUAL VEHICLES
WASHINGTON, D.C.

VEHICLE	YEAR	MAKE	MODEL	CID
5042	75	HOND	CIVI	091

MODE NO	HC	CO	CO2	NOX	MPG
01	.16	.38	21.7	.00	390.17
02	2.54	15.81	532.8	6.78	15.69
03	.35	2.72	278.2	1.30	31.30
04	.15	1.37	231.4	.60	37.93
05	.04	.23	20.3	.02	428.09
06	2.19	31.57	497.5	3.08	16.02
07	.15	3.84	357.0	.74	24.42
08	.39	5.09	361.7	3.86	23.93
09	.10	2.03	271.1	.33	32.32
10	.21	4.91	311.6	4.43	27.74
11	.20	2.50	251.4	1.98	34.67
12	.03	.83	163.3	.73	53.90
13	.07	2.20	164.2	.85	52.88
14	1.34	13.85	329.2	7.53	24.98
15	.70	12.46	353.9	5.20	23.62
16	.03	.78	210.8	2.05	41.85
17	.05	1.47	176.9	1.41	49.48
18	.55	6.40	355.0	6.99	24.20
19	.05	1.53	308.8	3.71	28.50
20	.02	.78	177.0	1.24	49.79
21	.21	4.98	262.9	.59	32.70
22	1.64	15.90	494.6	8.20	16.91
23	.06	1.25	308.8	4.27	28.54
24	.03	.67	196.2	1.15	44.98
25	.02	.23	57.2	.03	154.23
26	1.62	17.02	479.7	8.96	17.35
27	.06	1.10	292.5	4.08	30.14
28	.03	.49	189.9	1.19	46.53
29	.05	1.22	165.7	.56	52.91
30	.03	.83	174.0	.29	50.61
31	.15	2.10	271.5	.45	32.25
32	.08	1.58	413.4	.72	21.33
(BAG)	.41	6.08	291.7	3.31	29.35
(CALC)	.47	5.84	301.0	3.72	28.48
66	.33	.27	22.8	.01	366.56
67	1.49	4.29	507.2	.27	17.11
68	.08	2.52	517.0	.55	17.02
69	.11	2.46	321.7	.36	27.23
70	.04	1.37	232.2	.79	37.85
71	.04	1.38	210.0	1.74	41.81
72	.05	.87	267.5	3.97	32.99

MODE NO	HC	CO	CO2	NOX	MPG
33	.01	.23	21.7	.01	403.16
34	.83	12.85	480.6	6.19	17.63
35	.09	1.85	234.5	1.86	37.35
36	.02	.45	150.5	.18	58.69
37	.15	1.29	251.5	.37	34.95
38	.77	7.70	452.7	7.65	18.99
39	.05	2.23	287.9	1.86	30.44
40	.01	.78	206.3	.68	42.77
41	.02	.38	21.7	.01	397.86
42	2.86	25.84	456.0	9.32	17.55
43	.16	4.48	318.3	4.27	27.24
44	.03	.42	208.6	.66	42.40
45	.02	.32	21.7	.02	399.83
46	.76	11.40	481.4	6.29	17.69
47	.07	1.63	249.7	.93	35.16
48	1.15	14.06	352.5	6.41	23.46
49	.06	1.39	299.3	4.08	29.42
50	.03	.48	185.7	1.30	47.59
51	.09	1.63	158.6	.56	55.00
52	.02	.77	180.0	.35	48.96
53	.01	.25	21.7	.01	402.49
54	.76	7.52	441.6	8.21	19.47
55	.04	1.25	289.1	4.08	30.48
56	.02	.67	196.0	1.15	45.04
57	.02	.47	21.7	.01	395.26
58	1.10	12.33	475.8	5.03	17.80
59	.12	2.49	236.9	.93	36.80
60	1.38	22.16	366.3	7.75	21.89
61	.18	7.02	307.5	4.17	27.81
62	.03	.68	206.4	.60	42.77
63	.09	1.92	154.3	.74	56.33
64	.10	.75	196.3	.34	44.88
65	.03	.38	21.7	.01	397.21

EMISSION RESULTS IN GRAMS PER MILE (PER MINUTE FOR IDLE).
FUEL ECONOMY IN MILES PER GALLON (MINUTES PER GALLON FOR IDLE)

APPENDIX E

LISTING OF MODAL RESULTS ON INDIVIDUAL VEHICLES
WASHINGTON, D.C.

VEHICLE	YEAR	MAKE	MODEL	CID
5043	75	TOYO	CORO	097

MODE NO	HC	CO	CO2	NOX	MPG
01	.12	3.12	30.8	.00	246.49
02	4.94	50.72	686.4	8.25	11.35
03	.23	11.93	277.3	.54	29.91
04	1.41	6.88	180.3	.17	45.38
05	.10	2.50	36.8	.01	216.53
06	1.49	42.62	1,004.7	5.04	8.24
07	.73	13.27	365.7	.41	22.82
08	1.48	15.04	513.8	5.31	16.37
09	.20	10.02	265.4	.76	31.50
10	1.62	8.26	403.0	7.73	21.07
11	.31	6.81	231.5	2.05	36.50
12	2.37	4.27	121.4	.80	65.45
13	.33	8.31	207.9	.28	39.99
14	.88	23.22	492.5	7.59	16.69
15	.48	5.73	292.9	5.92	29.25
16	1.95	3.73	152.6	2.04	53.92
17	.35	5.68	229.3	1.73	37.09
18	1.02	5.09	394.8	10.84	21.86
19	.50	5.12	286.8	5.98	29.94
20	2.15	3.88	141.2	1.83	57.60
21	.53	12.53	338.0	.52	24.70
22	2.05	12.33	480.5	10.91	17.53
23	.50	5.15	282.8	5.91	30.35
24	2.70	3.79	120.5	1.53	65.77
25	.14	2.36	33.7	.07	207.27
26	2.32	14.84	512.3	10.69	16.34
27	.50	5.24	287.1	6.21	29.89
28	1.93	3.58	137.7	1.82	59.40
29	.29	7.74	270.9	.74	31.25
30	2.43	5.11	138.6	.20	57.52
31	.52	12.61	224.0	.12	36.16
32	.84	19.36	283.2	.11	28.06
(BAG)	1.41	9.40	320.8	4.47	26.12
(CALC)	1.43	9.33	309.1	4.77	27.03
66	.10	2.38	31.4	.00	250.56
67	1.30	36.57	534.7	.00	14.88
68	.25	16.76	583.4	.32	14.53
69	.20	11.56	350.3	.14	24.04
70	.27	7.85	253.6	.82	33.27
71	.51	5.19	218.8	2.69	38.83
72	.66	3.20	280.2	6.92	30.89

MODE NO	HC	CO	CO2	NOX	MPG
33	.11	2.95	41.6	.01	190.78
34	3.61	19.36	522.6	8.44	15.72
35	.28	8.07	231.2	2.01	36.26
36	2.28	3.70	113.6	.56	70.10
37	.67	10.48	342.5	.30	24.58
38	2.74	15.17	512.5	8.36	16.28
39	.30	7.00	235.2	2.27	35.92
40	1.72	4.46	128.1	.52	63.16
41	.12	2.81	42.2	.06	189.00
42	2.76	34.83	571.7	8.25	13.97
43	.48	6.16	292.0	6.14	29.27
44	2.32	5.21	141.1	1.67	56.67
45	.13	2.99	43.5	.06	182.73
46	5.19	24.05	659.3	7.68	12.43
47	.24	10.38	270.7	.68	30.84
48	1.14	6.80	410.9	8.84	20.87
49	.48	4.56	285.7	6.09	30.15
50	2.79	3.35	126.5	1.75	63.14
51	.51	7.35	196.8	.34	42.27
52	.72	5.85	158.5	.17	52.23
53	.11	2.64	38.7	.02	205.68
54	1.81	9.59	465.5	8.95	18.25
55	.50	4.59	283.4	6.26	30.38
56	1.86	4.33	146.0	1.58	55.94
57	.11	2.59	40.1	.08	199.58
58	2.41	23.24	617.5	5.86	13.41
59	.21	10.16	269.8	.83	30.99
60	1.49	8.11	447.4	11.34	19.09
61	.51	5.24	289.1	6.52	29.69
62	3.11	3.43	115.3	1.73	68.00
63	.46	7.68	203.7	.56	40.86
64	1.06	5.11	157.7	.37	52.50
65	.09	2.20	34.3	.04	233.65

EMISSION RESULTS IN GRAMS PER MILE (PER MINUTE FOR IDLE).
FUEL ECONOMY IN MILES PER GALLON (MINUTES PER GALLON FOR IDLE)

APPENDIX E

LISTING OF MODAL RESULTS ON INDIVIDUAL VEHICLES
WASHINGTON, D.C.

VEHICLE	YEAR	MAKE	MODEL	CID
5044	75	VOLK	DASH	090

MODE NO	HC	CO	CO2	NOX	MPG
01	.02	.07	87.0	.01	101.84
02	1.73	12.71	711.2	4.53	9.47
03	.27	1.44	392.0	.54	22.46
04	.25	.37	369.8	.30	23.91
05	.02	.09	89.9	.01	98.57
06	.91	.82	1,295.7	.83	6.82
07	.26	.38	435.7	.29	20.30
08	.68	1.88	617.3	1.38	14.26
09	.21	.69	385.8	.74	22.90
10	.47	2.16	505.9	2.32	17.37
11	.15	.70	324.0	1.13	27.26
12	.07	.25	202.0	.27	43.81
13	.13	.16	270.5	.12	32.73
14	.55	4.45	570.7	7.06	15.31
15	.16	3.29	375.2	1.90	23.30
16	.10	.35	211.9	.74	41.72
17	.10	.22	291.6	.61	30.37
18	.27	.87	482.9	4.51	18.29
19	.11	.74	368.9	1.98	23.96
20	.05	.29	225.4	.53	39.27
21	.05	.32	410.1	.16	21.61
22	.46	6.18	588.4	7.28	14.80
23	.10	.51	367.3	1.64	24.09
24	.06	.34	223.1	.59	39.66
25	.01	.12	87.6	.01	101.12
26	.45	5.23	629.5	6.29	13.88
27	.07	.44	369.5	1.43	23.96
28	.04	.24	205.9	.58	43.00
29	.07	.25	263.8	.12	33.57
30	.03	.26	266.5	.06	33.24
31	.04	.31	401.6	.30	22.06
32	.04	.68	648.9	.65	13.65
(BAG)	.21	1.88	330.1	2.17	23.14
(CALC)	.21	1.95	409.1	2.25	21.50
66	.02	.01	66.1	.02	134.23
67	.38	.30	840.7	.37	10.53
68	.21	.11	558.3	.77	15.87
69	.20	.04	322.1	.47	27.49
70	.12	.11	306.0	.35	28.95
71	.11	.12	257.9	.91	34.34
72	.06	.23	324.5	2.19	27.31

MODE NO	HC	CO	CO2	NOX	MPG
33	.01	.10	86.7	.03	102.23
34	.46	5.39	635.7	3.99	13.74
35	.08	.61	302.6	.86	29.22
36	.03	.27	229.1	.32	38.64
37	.03	.47	400.6	.19	22.1
38	.41	5.15	607.6	4.15	14.38
39	.09	.71	316.4	1.22	27.93
40	.03	.35	263.1	.34	33.65
41	.01	.09	88.1	.01	100.62
42	.91	12.70	672.8	7.14	12.76
43	.11	1.86	369.4	1.92	23.82
44	.06	.27	236.0	.52	37.51
45	.01	.12	87.9	.03	100.79
46	.50	7.47	810.4	2.23	10.77
47	.08	.51	370.3	.45	23.90
48	.23	2.01	496.8	4.50	17.72
49	.08	.57	370.8	1.92	23.86
50	.05	.25	205.2	.68	43.15
51	.06	.18	253.9	.12	34.89
52	.04	.34	340.0	.17	26.05
53	.01	.10	88.7	.02	99.91
54	.39	4.35	564.3	4.00	15.50
55	.08	.37	359.2	1.71	24.65
56	.05	.28	248.0	.63	35.70
57	.01	.10	86.4	.02	102.58
58	.46	4.38	751.3	1.43	11.68
59	.08	.29	357.7	.37	24.76
60	.27	2.36	532.2	6.58	16.53
61	.09	.95	366.6	1.96	24.09
62	.05	.27	208.0	.81	42.56
63	.06	.23	254.5	.16	34.80
64	.04	.36	328.6	.08	26.95
65	.01	.10	86.8	.01	102.10

EMISSION RESULTS IN GRAMS PER MILE (PER MINUTE FOR IDLE).
FUEL ECONOMY IN MILES PER GALLON (MINUTES PER GALLON FOR IDLE)

APPENDIX E

LISTING OF MODAL RESULTS ON INDIVIDUAL VEHICLES
WASHINGTON, D.C.

VEHICLE 5045 YEAR 75 MAKE VOLK MODEL RABB CID 090

MODE NO	HC	CO	CO2	NOX	MPG
01	.51	.64	35.9	.14	230.54
02	7.83	83.35	519.8	10.60	13.13
03	35.06	17.03	282.8	2.85	21.09
04	9.45	3.44	213.3	1.29	35.69
05	.52	.64	42.0	.05	198.93
06	11.85	58.56	467.1	4.21	14.87
07	12.52	8.90	301.5	2.61	24.99
08	6.41	56.57	218.6	6.05	27.07
09	5.41	8.24	242.8	2.23	32.52
10	3.22	43.33	380.0	6.58	19.36
11	1.05	17.98	255.6	4.21	30.91
12	3.07	8.49	187.5	1.81	42.16
13	5.95	10.13	143.3	1.27	49.84
14	3.46	233.54	312.4	1.80	12.85
15	1.83	74.75	334.2	4.44	19.40
16	3.56	11.38	219.0	4.28	35.76
17	3.33	21.67	163.5	2.32	42.65
18	2.09	49.41	389.0	8.39	18.75
19	1.11	26.29	349.6	7.73	22.50
20	2.96	8.46	195.1	2.45	40.76
21	4.36	13.96	192.7	.48	38.86
22	4.87	21.08	373.5	2.53	21.03
23	1.09	22.97	330.4	7.33	23.99
24	4.04	5.63	233.1	3.08	34.84
25	.30	.64	43.2	.03	196.83
26	2.98	11.80	538.0	6.65	15.68
27	.98	20.54	334.2	7.81	24.01
28	3.00	8.10	192.3	2.93	41.38
29	5.53	18.28	150.7	1.05	45.07
30	5.24	8.22	192.0	.84	40.07
31	3.10	13.96	217.4	.19	35.62
32	2.32	17.14	390.3	.22	20.90
(BAG)	3.50	37.99	313.8	4.13	23.09
(CALC)	3.55	45.09	305.9	4.49	22.87
66	.47	.62	[illegible]4.8	.03	238.48
67	2.61	10.52	435.8	.00	19.26
68	40.99	6.94	396.4	3.46	16.52
69	8.82	24.34	247.7	1.87	28.27
70	5.45	19.65	220.4	1.51	33.06
71	.95	14.84	211.9	2.97	37.26
72	.61	19.27	307.8	7.08	26.10

MODE NO	HC	CO	CO2	NOX	MPG
33	.73	.64	45.7	.03	181.22
34	3.56	70.43	470.8	6.69	14.97
35	.84	20.44	257.3	3.05	30.39
36	3.54	4.87	153.9	1.46	51.38
37	7.59	8.90	177.9	.85	41.10
38	3.66	49.85	331.9	5.94	21.04
39	.97	22.90	243.8	2.74	31.38
40	4.88	5.40	174.0	1.27	44.84
41	.32	.64	44.5	.03	191.08
42	5.66	191.23	444.4	3.63	11.63
43	1.26	27.80	334.2	5.88	23.24
44	2.80	8.42	210.7	3.41	38.12
45	.17	.95	45.7	.03	186.24
46	4.29	64.49	488.2	6.90	14.71
47	5.03	5.72	275.3	1.93	29.56
48	2.17	66.50	393.3	7.08	17.58
49	.95	16.25	341.9	8.27	23.96
50	2.67	4.[illegible]	182.8	2.44	44.63
51	4.87	8.25	143.3	1.12	51.70
52	4.93	10.73	236.4	1.21	33.01
53	.63	.64	51.9	.03	161.85
54	3.02	72.07	447.2	6.96	15.57
55	1.17	15.03	331.7	7.44	24.72
56	5.55	1.69	144.5	1.94	53.89
57	.27	.64	44.5	.03	191.69
58	9.90	26.72	466.1	7.13	16.45
59	14.80	1.91	257.8	3.11	28.84
60	3.43	116.32	407.0	6.55	14.77
61	1.14	9.45	352.2	8.27	23.94
62	3.42	3.27	193.3	4.25	42.41
63	5.31	14.53	153.2	1.45	46.02
64	5.9[illegible]	11.62	221.5	1.65	34.32
65	.77	1.27	53.1	.05	154.42

EMISSION RESULTS IN GRAMS PER MILE (PER MINUTE FOR IDLE).
FUEL ECONOMY IN MILES PER GALLON (MINUTES PER GALLON FOR IDLE)

APPENDIX E

LISTING OF MODAL RESULTS ON INDIVIDUAL VEHICLES
WASHINGTON, D.C.

VEHICLE	YEAR	MAKE	MODEL	CID
6001	75	CHEV	CUST	250

MODE NO	HC	CO	CO2	NOX	MPG
01	.00	.10	90.0	.02	98.45
02	3.64	62.06	1,254.2	6.89	6.51
03	.12	1.18	371.4	1.78	23.75
04	.03	.07	369.4	.85	24.01
05	.00	.00	92.6	.08	95.88
06	.05	.00	1,574.4	3.86	5.63
07	.00	.00	518.5	1.13	17.11
08	.32	10.24	784.8	3.63	11.06
09	.01	.96	378.8	1.96	23.33
10	.03	.14	683.0	4.09	12.98
11	.01	.07	466.4	2.09	19.02
12	.04	.04	276.6	.59	32.07
13	.02	.13	324.0	.78	27.37
14	1.45	66.57	851.5	8.96	9.23
15	.08	4.83	573.6	6.10	15.26
16	.03	.04	330.4	2.41	26.85
17	.00	.07	377.9	.91	23.48
18	.04	1.33	750.5	6.64	11.79
19	.00	.00	566.1	6.11	15.67
20	.00	.00	297.5	1.58	29.83
21	.00	.00	473.2	.63	18.75
22	1.14	40.28	883.9	9.65	9.33
23	.00	.00	535.0	5.58	16.59
24	.00	.00	329.7	2.21	26.92
25	.00	.00	90.7	.09	97.85
26	1.01	32.58	934.4	9.41	8.97
27	.01	.04	533.3	5.56	16.64
28	.01	.11	293.3	1.67	30.24
29	.00	.27	310.7	.82	28.52
30	.00	.28	286.2	.70	30.96
31	.00	.30	441.7	.26	20.07
32	.00	.98	722.7	.40	12.25
(BAG)	.25	11.10	571.0	4.21	15.07
(CALC)	.28	10.94	567.6	4.43	15.15
66	.01	.00	86.9	.02	102.15
67	.21	.02	1,059.5	.67	8.37
68	.05	.00	807.2	.89	10.99
69	.04	.08	503.5	.58	17.62
70	.02	.00	347.0	1.40	25.57
71	.01	.00	425.9	1.31	20.83
72	.01	.00	506.2	4.63	17.53

MODE NO	HC	CO	CO2	NOX	MPG
33	.00	.13	89.6	.02	98.85
34	1.48	42.08	916.9	8.23	8.98
35	.01	.21	436.1	2.03	20.33
36	.01	.13	280.9	.55	31.57
37	.00	.34	444.5	.38	19.94
38	.32	14.07	831.9	7.83	10.38
39	.00	.93	471.6	2.69	18.76
40	.00	.00	322.8	.73	27.49
41	.00	.00	92.5	.08	95.96
42	3.15	161.47	902.2	7.53	7.61
43	.04	.58	546.2	5.92	16.22
44	.02	.00	331.0	1.82	26.81
45	.00	.00	92.1	.08	96.38
46	1.32	27.43	1,096.8	6.94	7.75
47	.01	.52	362.1	2.04	24.45
48	.02	.36	764.4	6.74	11.60
49	.00	.00	552.6	6.00	16.06
50	.01	.00	283.8	1.68	31.27
51	.00	.00	306.7	.93	28.94
52	.00	.00	398.6	1.12	22.26
53	.00	.00	93.5	.10	94.94
54	.25	9.12	859.0	8.70	10.15
55	.00	.00	519.4	5.32	17.08
56	.00	.00	327.7	1.69	27.08
57	.00	.00	93.2	.10	95.24
58	.44	13.42	977.7	5.77	8.87
59	.00	.36	359.0	1.63	24.68
60	.20	11.62	812.9	8.23	10.67
61	.00	.32	568.8	6.46	15.59
62	.00	.00	292.6	2.12	30.33
63	.00	.00	311.8	.90	28.46
64	.00	.16	402.4	1.29	22.04
65	.00	.04	91.8	.07	96.64

EMISSION RESULTS IN GRAMS PER MILE (PER MINUTE FOR IDLE).
FUEL ECONOMY IN MILES PER GALLON (MINUTES PER GALLON FOR IDLE)

APPENDIX E

LISTING OF MODAL RESULTS ON INDIVIDUAL VEHICLES
WASHINGTON, D.C.

VEHICLE	YEAR	MAKE	MODEL	CID
6002	75	CHEV	CUST	350

MODE NO	HC	CO	CO2	NOX	MPG
01	.01	.01	99.6	.09	89.11
02	.21	1.44	1,189.1	15.01	7.44
03	.03	.03	524.9	.99	16.90
04	.11	.00	515.1	.52	17.21
05	.01	.00	99.6	.07	89.11
06	.12	.00	1,364.6	4.48	6.50
07	.06	.00	612.4	.88	14.48
08	.08	.08	930.7	6.51	9.53
09	.04	.06	524.9	.88	16.90
10	.10	.05	734.1	10.98	12.08
11	.03	.04	511.4	2.95	17.35
12	.20	.02	366.2	.89	24.19
13	.04	.00	386.3	.62	22.97
14	.14	.42	948.3	16.70	9.34
15	.03	.06	751.8	6.71	11.80
16	.05	.03	417.1	2.47	21.27
17	.03	.73	409.2	2.27	21.62
18	.07	.08	779.4	15.91	11.38
19	.02	.06	645.2	6.69	13.75
20	.05	.02	371.0	1.28	23.91
21	.00	.00	517.7	.58	17.14
22	.09	1.54	1,039.4	20.14	8.51
23	.02	.04	645.2	6.71	13.75
24	.04	.03	472.4	1.36	18.78
25	.00	.00	104.6	.15	84.86
26	.08	.56	1,047.2	21.11	8.46
27	.02	.04	624.1	8.36	14.22
28	.00	.02	376.6	1.22	23.56
29	.02	.00	386.3	.40	22.97
30	.04	.00	419.3	.66	21.16
31	.02	.00	532.6	.66	16.66
32	.04	.00	873.1	.56	10.16
(BAG)	.05	.25	626.9	6.33	14.14
(CALC)	.05	.30	657.2	7.58	13.49
66	.01	.00	98.2	.11	90.41
67	.50	.00	1,122.4	.43	7.89
68	.29	.00	602.8	.22	14.70
69	.07	.00	572.2	.72	15.50
70	.03	.00	470.4	.72	18.86
71	.02	.00	440.3	2.36	20.15
72	.01	.00	567.3	5.87	15.64

MODE NO	HC	CO	CO2	NOX	MPG
33	.01	.00	98.4	.09	90.20
34	.13	1.14	976.7	16.66	9.06
35	.03	.06	507.9	2.96	17.47
36	.05	.03	338.8	.63	26.18
37	.02	.06	522.7	.55	16.97
38	.09	1.75	828.7	14.61	10.67
39	.03	.16	501.1	2.90	17.70
40	.08	.04	438.6	1.38	20.22
41	.01	.01	99.6	.07	89.11
42	.04	.95	1,178.8	24.32	7.51
43	.02	.06	655.8	6.89	13.53
44	.06	.03	449.3	1.85	19.74
45	.01	.00	98.4	.09	90.20
46	.09	3.79	1,123.1	10.36	7.85
47	.01	.06	489.5	1.06	18.12
48	.06	.35	751.0	15.73	11.80
49	.02	.04	629.3	6.53	14.10
50	.06	.04	240.5	1.32	36.87
51	.03	.06	411.5	.73	21.56
52	.00	.06	490.5	.34	18.09
53	.01	.00	99.6	.09	89.11
54	.09	.41	950.5	18.98	9.32
55	.02	.04	617.5	6.44	14.37
56	.06	.03	417.9	1.36	21.22
57	.01	.01	99.6	.10	89.11
58	.11	3.78	1,125.4	10.22	7.84
59	.02	.09	461.8	.69	19.21
60	.06	.08	787.2	17.90	11.27
61	.02	.06	657.2	6.71	13.50
62	.04	.02	337.8	1.11	26.26
63	.02	.00	669.8	.88	13.25
64	.06	.00	446.4	.40	19.87
65	.01	.00	99.6	.09	89.11

EMISSION RESULTS IN GRAMS PER MILE (PER MINUTE FOR IDLE).
FUEL ECONOMY IN MILES PER GALLON (MINUTES PER GALLON FOR IDLE)

APPENDIX E

LISTING OF MODAL RESULTS ON INDIVIDUAL VEHICLES
WASHINGTON, D.C.

VEHICLE	YEAR	MAKE	MODEL	CID
6003	75	CHEV	CUST	350

MODE NO	HC	CO	CO2	NOX	MPG
01	.16	3.30	106.2	.19	79.36
02	.45	4.39	1,357.3	23.50	6.49
03	.11	5.17	401.3	1.67	21.66
04	.09	1.09	421.3	1.07	20.97
05	.01	.06	109.4	.25	81.09
06	.34	4.13	1,371.5	6.89	6.43
07	1.07	16.98	503.5	.85	16.63
08	.32	3.58	913.8	14.82	9.64
09	.10	2.68	432.1	1.91	20.33
10	.20	.24	799.2	20.34	11.09
11	.09	1.12	464.7	4.83	19.01
12	.23	.77	236.5	1.66	37.23
13	.06	.32	403.2	1.75	21.97
14	.32	2.20	1,047.5	25.34	8.43
15	.10	2.53	569.1	10.04	15.48
16	.40	3.70	271.7	3.58	31.84
17	.06	.66	437.7	3.72	20.22
18	.16	.24	832.3	23.92	10.65
19	.05	.18	571.8	12.06	15.51
20	.08	.22	288.6	2.78	30.69
21	.63	11.83	495.1	.56	17.21
22	.23	2.85	1,000.0	27.74	8.82
23	.04	.13	555.4	11.56	15.97
24	.23	1.17	272.5	2.42	32.27
25	.06	2.35	110.8	.32	77.43
26	.21	2.59	1,041.8	29.69	8.48
27	.04	.12	553.9	11.53	16.01
28	.19	.82	275.5	2.90	31.99
29	.12	3.83	370.5	1.12	23.55
30	1.23	28.78	269.4	.42	27.86
31	2.13	68.75	410.8	.47	16.88
32	2.90	80.74	790.3	1.18	9.58
(BAG)	.33	6.15	601.1	10.25	14.50
(CALC)	.35	6.76	612.0	11.20	14.23
66	.03	.20	95.3	.28	92.79
67	.42	.21	1,093.3	.67	8.10
68	.42	.67	538.4	.22	16.41
69	.24	.36	499.0	.60	17.74
70	.09	.02	411.8	2.14	21.53
71	.05	.00	451.2	4.53	19.66
72	.04	4.29	500.9	9.71	17.48

MODE NO	HC	CO	CO2	NOX	MPG
33	.39	10.45	107.0	.27	71.22
34	.39	9.29	1,061.2	27.45	8.24
35	.07	.26	462.0	4.94	19.18
36	.56	3.10	258.0	1.27	33.54
37	1.55	25.83	471.9	.53	17.15
38	.37	9.22	1,027.2	23.75	8.51
39	.08	2.77	460.0	4.03	19.10
40	.22	1.86	308.6	.94	28.43
41	.17	4.14	109.1	.09	76.45
42	.43	15.11	1,171.5	25.53	7.41
43	.05	.21	553.6	11.33	16.01
44	.23	1.75	305.9	2.77	28.69
45	.20	5.92	105.2	.36	77.14
46	.72	31.17	1,176.0	14.43	7.23
47	.03	5.08	408.2	1.11	21.32
48	.15	.62	859.9	24.06	10.30
49	.05	.40	560.0	11.33	15.82
50	.81	3.35	248.7	2.48	34.60
51	.81	27.43	337.9	1.26	23.14
52	2.17	75.01	365.1	.73	18.12
53	.37	11.53	103.7	.16	72.17
54	.27	3.79	940.2	25.20	9.37
55	.07	.16	556.3	10.95	15.94
56	.80	7.18	322.2	2.57	26.41
57	.42	14.42	97.9	.24	72.85
58	.94	48.38	1,051.5	10.86	7.85
59	.45	19.90	384.7	1.16	21.26
60	.21	2.90	948.9	24.28	9.30
61	.07	2.13	573.7	11.13	15.37
62	.79	2.92	230.5	2.36	37.36
63	.22	6.26	36[illegible]	.66	23.53
64	1.76	47.55	3[illegible]4.[illegible]	.40	19.53
65	.44	19.72	94.8	.21	69.80

EMISSION RESULTS IN GRAMS PER MILE (PER MINUTE FOR IDLE).
FUEL ECONOMY IN MILES PER GALLON (MINUTES PER GALLON FOR IDLE)

APPENDIX E

LISTING OF MODAL RESULTS ON INDIVIDUAL VEHICLES
WASHINGTON, D.C.

VEHICLE	YEAR	MAKE	MODEL	CID
6004	75	CHEV	SCOT	350

MODE NO	HC	CO	CO2	NOX	MPG	MODE NO	HC	CO	CO2	NOX	MPG
01	.01	.10	106.1	.28	83.55	33	.00	.08	108.7	.38	81.58
02	.31	4.40	1,416.5	10.44	6.23	34	.12	2.66	1,100.8	13.15	8.02
03	.10	6.86	459.6	1.17	18.85	35	.04	2.57	487.1	2.13	18.06
04	.09	.34	435.3	1.07	20.35	36	.04	.55	296.1	.72	29.88
05	.01	.07	107.8	.27	82.27	37	.03	.38	556.9	.94	15.91
06	.18	.54	1,475.2	6.00	6.01	38	.15	.21	1,038.4	12.91	8.54
07	.05	.32	590.1	1.39	15.02	39	.16	9.89	498.8	2.82	17.24
08	.19	.73	972.4	6.63	9.11	40	.06	1.71	348.9	.71	25.23
09	.11	5.13	458.7	1.76	19.00	41	.01	.08	109.7	.34	80.84
10	.19	.29	826.1	9.76	10.73	42	1.10	41.03	1,168.7	14.13	7.17
11	.12	5.29	493.8	1.85	17.66	43	.08	6.01	593.8	3.49	14.70
12	.12	.64	289.7	.99	30.49	44	.07	2.82	347.6	1.41	25.20
13	.06	.22	458.5	1.30	19.33	45	.01	.07	109.0	.36	81.36
14	.44	14.46	1,057.2	7.96	8.20	46	.11	1.63	1,194.4	9.58	7.41
15	.11	7.06	610.3	4.89	14.27	47	.07	3.60	467.2	1.73	18.76
16	.10	1.04	307.8	2.46	28.66	48	.11	1.18	869.8	12.91	10.17
17	.04	.23	454.7	2.34	19.50	49	.06	3.48	605.2	5.13	14.53
18	.11	.17	817.3	15.08	10.85	50	.06	2.93	291.5	1.75	29.96
19	.05	.30	602.6	7.39	14.71	51	.02	.20	429.1	1.17	20.66
20	.04	.41	311.8	1.71	28.39	52	.03	.34	462.4	1.59	19.17
21	.03	.39	548.2	1.11	16.17	53	.00	.07	109.5	.39	80.98
22	.12	.91	1,020.6	16.38	8.68	54	.10	.66	949.8	12.39	9.33
23	.04	1.22	602.1	5.46	14.69	55	.05	2.83	603.0	4.27	14.60
24	.06	2.26	343.9	1.63	25.53	56	.05	2.71	350.2	1.21	25.03
25	.00	.08	108.5	.41	81.72	57	.01	.04	108.4	.38	81.85
26	.16	6.61	1,065.3	16.54	8.24	58	.20	5.77	1,072.4	6.96	8.20
27	.04	.97	595.8	5.79	14.85	59	.06	9.29	453.9	1.13	18.93
28	.04	.75	304.6	1.77	29.01	60	.14	2.46	946.7	13.97	9.33
29	.02	.16	425.1	1.45	20.86	61	.07	6.46	594.1	4.91	14.68
30	.02	.18	343.0	.89	25.85	62	.11	4.71	289.6	1.64	29.85
31	.02	.24	541.4	.95	16.38	63	.03	.23	397.9	1.64	22.28
32	.05	.58	903.1	1.61	9.81	64	.03	.27	459.6	1.91	19.29
						65	.01	.07	110.1	.47	80.55
(BAG)	.11	3.88	638.2	5.57	13.77						
(CALC)	.12	3.87	646.9	5.97	13.58						
66	.01	.00	103.5	.30	85.76						
67	.37	.00	1,225.8	1.72	7.23						
68	.20	.00	620.3	.54	14.29						
69	.09	.00	565.1	.93	15.69						
70	.05	.00	447.8	1.68	19.81						
71	.04	.00	472.9	2.85	18.76						
72	.02	.00	554.3	5.77	16.01						

EMISSION RESULTS IN GRAMS PER MILE (PER MINUTE FOR IDLE).
FUEL ECONOMY IN MILES PER GALLON (MINUTES PER GALLON FOR IDLE)

APPENDIX E

LISTING OF MODAL RESULTS ON INDIVIDUAL VEHICLES
WASHINGTON, D.C.

VEHICLE	YEAR	MAKE	MODEL	CID
6005	75	DODG	D100	318

MODE NO	HC	CO	CO2	NOX	MPG	MODE NO	HC	CO	CO2	NOX	MPG
01	.47	8.07	83.4	.04	91.02	33	.50	8.07	84.6	.04	89.80
02	4.08	31.06	1,640.1	22.85	5.21	34	3.07	18.82	1,354.3	19.12	6.36
03	1.29	10.37	391.9	2.40	21.53	35	1.10	3.47	464.3	5.34	18.75
04	1.46	20.97	373.2	.58	21.60	36	4.06	12.39	245.1	.84	31.99
05	.45	6.79	84.6	.08	91.84	37	1.88	16.86	445.4	.32	18.57
06	6.76	81.00	1,729.4	15.32	4.72	38	2.83	18.35	1,158.7	21.35	7.41
07	1.55	16.86	573.1	1.44	14.68	39	1.14	3.90	494.1	5.29	17.61
08	2.52	6.76	1,218.0	13.56	7.17	40	4.67	14.93	335.5	.88	23.74
09	1.26	7.14	399.7	2.32	21.39	41	.55	6.47	84.6	.04	92.02
10	1.70	4.66	1,000.5	13.76	8.76	42	3.91	60.94	1,334.7	24.04	6.15
11	.99	2.17	488.8	5.13	17.91	43	1.04	3.25	587.5	10.57	14.89
12	3.70	6.14	264.4	1.32	31.06	44	5.39	12.03	287.9	1.63	27.40
13	1.78	5.85	376.5	1.36	22.68	45	.57	8.07	84.6	.08	89.60
14	4.19	60.34	1,208.6	20.06	6.74	46	3.95	20.85	612.3	21.63	13.49
15	1.07	3.89	594.2	10.04	14.70	47	1.59	19.33	371.3	2.40	21.82
16	3.73	4.16	316.0	2.78	26.54	48	1.83	9.03	974.7	17.92	8.92
17	2.98	5.62	422.4	4.08	20.14	49	1.13	3.25	588.7	10.49	14.85
18	1.70	6.29	921.3	16.66	9.47	50	5.32	7.81	229.3	1.62	34.34
19	1.03	2.92	575.3	10.42	15.22	51	2.43	17.42	330.2	1.60	24.30
20	4.30	9.13	271.9	2.25	29.60	52	2.06	30.30	360.6	.45	21.40
21	2.07	23.31	430.1	.48	18.75	53	.53	9.99	82.1	.04	89.27
22	3.17	52.38	1,231.5	20.40	6.70	54	2.17	11.74	1,078.0	19.54	8.04
23	1.07	3.25	583.4	10.68	14.99	55	.95	3.25	568.6	10.12	15.39
24	7.03	11.48	274.6	1.56	28.18	56	4.93	11.46	301.5	2.12	26.48
25	.89	8.39	84.6	.04	88.26	57	.57	9.35	84.6	.04	87.82
26	2.84	21.19	736.9	21.10	11.39	58	4.44	22.99	1,268.1	17.65	6.73
27	1.12	3.25	580.7	10.57	15.06	59	1.46	13.58	376.5	2.80	22.05
28	5.82	8.28	257.5	2.09	30.71	60	2.61	19.00	1,092.0	21.36	7.85
29	2.39	16.78	366.2	1.44	22.18	61	1.18	3.57	613.1	10.76	14.25
30	1.38	17.59	285.1	.31	27.99	62	5.56	7.91	232.3	.93	33.83
31	2.13	25.88	435.2	.16	18.39	63	2.04	3.25	361.0	1.60	23.82
32	2.87	37.46	720.8	.31	11.25	64	1.60	22.50	323.7	.73	24.37
						65	.53	9.67	83.4	.04	88.59
(BAG)	2.63	13.54	639.8	8.84	13.26						
(CALC)	2.85	15.25	643.5	9.44	13.12						
66	.49	7.46	80.9	.05	94.28						
67	5.46	86.28	1,006.6	.66	7.65						
68	1.97	25.19	616.7	.55	13.39						
69	.99	10.17	489.9	.59	17.43						
70	1.31	8.94	363.5	1.50	23.25						
71	1.04	3.40	435.5	4.05	19.98						
72	1.18	4.95	524.4	15.72	16.56						

EMISSION RESULTS IN GRAMS PER MILE (PER MINUTE FOR IDLE).
FUEL ECONOMY IN MILES PER GALLON (MINUTES PER GALLON FOR IDLE)

APPENDIX E

LISTING OF MODAL RESULTS ON INDIVIDUAL VEHICLES
WASHINGTON, D.C.

VEHICLE	YEAR	MAKE	MODEL	CID
6006	75	FORD	ECON	300

MODE NO	HC	CO	CO2	NOX	MPG
01	.02	.00	110.0	.03	80.65
02	6.94	265.78	821.4	4.85	7.03
03	.90	2.48	436.6	1.64	20.02
04	.31	.00	507.2	.98	17.46
05	.03	.00	110.0	.03	80.63
06	.60	4.02	1,681.9	7.87	5.25
07	.17	1.16	613.4	.65	14.41
08	1.30	40.34	692.1	3.32	11.68
09	.27	.58	544.9	1.46	16.23
10	.49	4.98	657.2	4.36	13.31
11	.38	.81	481.8	4.38	18.32
12	.90	.46	310.8	1.73	28.24
13	.41	3.11	319.1	.91	27.28
14	1.09	123.76	760.9	4.55	9.25
15	.37	3.13	567.8	4.02	15.46
16	.69	1.07	376.6	1.49	23.33
17	.18	1.23	373.4	3.41	23.61
18	.86	48.39	814.2	4.28	9.94
19	.21	1.55	580.8	4.75	15.20
20	1.01	.90	281.4	1.22	31.03
21	.17	6.21	578.6	.36	15.07
22	2.02	158.94	766.5	4.29	8.67
23	.15	2.18	539.1	4.75	16.34
24	1.85	.51	261.0	1.13	33.16
25	.04	.61	112.4	.03	78.23
26	2.10	133.44	809.3	4.70	8.65
27	.12	1.24	528.7	4.93	16.71
28	.97	.78	252.2	1.17	34.60
29	.35	.58	344.1	.84	25.64
30	.17	.00	316.9	.28	27.96
31	.26	.53	538.9	.36	16.42
32	.17	1.02	904.7	.41	9.78
(BAG)	.95	33.50	514.9	2.55	15.56
(CALC)	.94	36.92	568.3	2.99	14.10
66	.01	.03	85.3	.03	104.03
67	.36	.21	983.0	.43	9.01
68	.03	.15	795.8	.64	11.14
69	.03	.09	434.5	.43	20.41
70	.05	.01	303.0	.79	29.28
71	.06	.21	368.1	3.77	24.07
72	.09	.51	458.2	4.06	19.32

MODE NO	HC	CO	CO2	NOX	MPG
33	.02	6.26	102.6	.05	78.95
34	2.28	160.75	833.2	6.85	8.12
35	.16	.81	434.2	3.41	20.36
36	.89	.56	329.6	1.05	26.62
37	.28	2.42	538.9	.58	16.32
38	1.39	83.18	584.6	2.22	12.33
39	.16	.39	430.9	3.41	20.54
40	1.59	.32	321.2	1.24	27.16
41	41.05	3.13	97.6	.03	38.14
42	3.32	204.10	789.3	4.59	7.92
43	.26	1.87	502.8	4.57	17.52
44	1.52	1.07	260.7	1.13	33.22
45	.05	.29	110.0	.07	80.25
46	2.74	212.66	1,078.9	3.40	6.24
47	.23	1.84	449.2	1.28	19.60
48	.68	48.52	807.1	2.91	10.02
49	.13	1.24	528.6	4.66	16.71
50	1.05	.37	269.3	.93	32.49
51	.31	1.21	344.2	.73	25.57
52	.14	1.09	505.7	.34	17.47
53	.02	.45	117.4	.04	75.13
54	1.29	80.73	794.2	5.77	9.59
55	.12	.92	502.8	4.66	17.58
56	1.71	.51	304.7	.97	28.54
57	.04	.00	117.4	.16	75.52
58	2.18	133.53	2,234.0	2.90	3.62
59	.14	12.51	789.1	.91	10.96
60	1.05	113.57	782.2	2.46	9.20
61	.14	2.18	541.7	4.38	16.26
62	.97	.37	285.8	.06	30.66
63	.31	.90	369.0	.62	23.90
64	.10	1.06	606.8	.19	14.58
65	.02	.13	110.0	.03	80.52

EMISSION RESULTS IN GRAMS PER MILE (PER MINUTE FOR IDLE).
FUEL ECONOMY IN MILES PER GALLON (MINUTES PER GALLON FOR IDLE)

APPENDIX E

LISTING OF MODAL RESULTS ON INDIVIDUAL VEHICLES
WASHINGTON, D.C.

VEHICLE	YEAR	MAKE	MODEL	CID
6007	75	FORD	CUST	302

MODE NO	HC	CO	CO2	NOX	MPG
01	.04	.00	119.3	.04	74.34
02	.97	2.10	1,187.1	23.53	7.43
03	.15	.64	508.9	1.86	17.39
04	.08	.00	469.5	.28	18.89
05	.04	.00	119.3	.04	74.34
06	.52	.10	1,354.0	7.71	6.54
07	.08	.00	566.5	.62	15.66
08	.63	1.20	780.2	14.23	11.32
09	.15	.06	476.1	1.86	18.62
10	.63	2.18	650.8	9.26	13.52
11	.24	.73	553.3	6.34	15.98
12	.06	.09	235.2	1.22	37.69
13	.06	.00	383.1	1.40	23.15
14	1.15	29.35	704.5	14.44	11.76
15	.28	4.77	737.5	10.37	11.90
16	.07	.30	385.2	4.22	23.00
17	.08	.15	361.2	3.55	24.54
18	.57	3.02	666.5	17.05	13.18
19	.18	1.31	697.2	10.62	12.68
20	.05	.17	383.5	2.30	23.12
21	.13	.00	472.2	.15	18.78
22	.69	1.81	952.5	19.75	9.26
23	.14	1.11	662.7	10.40	13.34
24	.05	.21	420.1	1.99	21.10
25	.03	.00	119.3	.08	74.37
26	.56	3.64	931.0	21.46	9.45
27	.09	.92	642.8	10.07	13.77
28	.05	.19	345.2	2.08	25.68
29	.04	.00	360.6	1.24	24.60
30	.04	.00	379.8	.40	23.36
31	.10	.00	472.2	.15	18.78
32	.20	.00	890.7	.29	9.95
(BAG)	.28	2.96	640.2	8.20	13.75
(CALC)	.28	2.62	627.9	8.50	14.02
66	.00	.01	117.9	-.09	75.29
67	.49	.04	1,384.5	.86	6.40
68	.25	.01	708.2	.32	12.51
69	.19	.03	496.4	.36	17.85
70	.09	.07	421.2	1.43	21.05
71	.14	.32	456.4	5.36	19.40
72	.08	.66	578.9	9.46	15.29

MODE NO	HC	CO	CO2	NOX	MPG
33	.03	.00	116.8	.04	75.95
34	.71	2.50	1,118.4	17.55	7.89
35	.10	.15	498.6	5.53	17.78
36	.05	.06	787.5	.67	11.26
37	.10	.35	477.1	.31	18.57
38	.58	2.58	839.9	15.37	10.49
39	.09	.39	544.7	6.24	16.26
40	.18	.07	401.4	.94	22.07
41	.03	.03	116.8	.08	75.93
42	.87	32.87	1,157.8	15.24	7.32
43	.12	1.03	664.0	9.85	13.32
44	.05	.21	297.3	2.13	29.80
45	.03	.03	118.0	.08	75.15
46	.60	.88	1,194.7	20.22	7.40
47	.06	.06	483.7	2.25	18.33
48	.53	2.86	802.1	12.42	10.98
49	.10	.89	654.7	10.22	13.52
50	.03	.18	260.8	1.77	33.99
51	.05	.00	343.2	1.24	25.85
52	.08	.00	457.1	.29	19.40
53	.03	.00	115.6	.08	76.75
54	.50	2.29	851.7	17.87	10.35
55	.10	.83	629.6	10.11	14.06
56	.06	.21	261.9	2.06	33.82
57	.03	.00	118.0	.08	75.17
58	.51	.78	1,171.0	14.31	7.56
59	.04	.00	174.3	1.47	50.89
60	.58	4.09	766.5	18.81	11.45
61	.10	.97	677.3	9.63	13.06
62	.04	.11	267.5	1.45	33.15
63	.04	.00	358.1	1.01	24.77
64	.08	.00	459.3	.14	19.31
65	.03	.00	116.8	.00	75.95

EMISSION RESULTS IN GRAMS PER MILE (PER MINUTE FOR IDLE).
FUEL ECONOMY IN MILES PER GALLON (MINUTES PER GALLON FOR IDLE)

APPENDIX E

LISTING OF MODAL RESULTS ON INDIVIDUAL VEHICLES
WASHINGTON, D.C.

VEHICLE	YEAR	MAKE	MODEL	CID
6008	75	FORD	CLUB	351

MODE NO	HC	CO	CO2	NOX	MPG
01	.47	.27	147.7	.48	59.34
02	5.13	27.02	1,572.9	18.75	5.43
03	1.42	8.07	568.0	3.85	15.16
04	2.76	2.85	437.9	.75	19.67
05	.55	.57	99.5	.06	86.93
06	6.25	26.31	1,690.3	12.28	5.06
07	1.87	2.37	533.0	1.45	16.35
08	2.83	11.00	1,253.6	11.48	6.93
09	1.37	4.73	524.7	3.40	16.54
10	2.08	13.20	1,067.4	12.92	8.10
11	1.06	6.29	617.3	6.23	14.07
12	4.48	3.71	294.8	1.12	28.19
13	1.95	3.50	463.5	1.57	18.68
14	4.77	88.40	1,155.4	17.76	6.77
15	1.81	12.92	762.2	13.91	11.26
16	2.78	6.18	345.9	2.91	24.35
17	1.21	5.00	516.4	4.13	16.80
18	1.99	12.65	1,017.4	16.57	8.50
19	1.16	5.82	690.6	12.11	12.61
20	3.21	3.36	357.3	2.80	23.81
21	2.40	3.38	563.7	1.61	15.39
22	4.18	84.83	1,213.7	18.98	6.52
23	1.09	6.11	668.5	11.90	13.02
24	1.31	2.93	391.1	2.41	22.19
25	.53	.66	107.9	.13	80.28
26	3.19	27.25	1,351.9	22.45	6.31
27	.96	5.87	660.1	11.75	13.20
28	3.24	3.85	326.7	3.10	25.87
29	1.30	3.90	461.1	2.03	18.83
30	2.13	3.45	327.7	.64	26.11
31	1.55	3.47	511.1	.84	17.02
32	3.63	3.47	783.7	1.02	11.08
(BAG)	2.52	17.18	749.9	7.94	11.30
(CALC)	2.60	16.67	762.1	9.88	11.14
66	.42	.11	83.1	.11	99.10
67	5.06	2.35	1,036.4	.64	8.40
68	2.02	1.68	608.1	.43	14.38
69	1.33	1.89	505.9	.50	17.29
70	1.18	2.63	445.4	1.98	19.58
71	.64	3.24	513.5	3.44	17.05
72	.81	4.48	581.9	7.22	15.00

MODE NO	HC	CO	CO2	NOX	MPG
33	.63	2.70	103.3	.21	81.06
34	3.18	22.06	1,440.3	20.31	5.97
35	.75	4.77	562.6	5.39	15.50
36	4.16	3.18	306.2	1.06	27.36
37	2.17	4.43	508.6	.53	16.99
38	3.60	27.51	1,325.1	20.33	6.43
39	.82	5.08	607.6	6.18	14.35
40	5.57	3.39	329.7	.70	25.16
41	.66	1.15	101.5	.17	84.24
42	5.28	126.11	1,466.0	22.61	5.28
43	1.04	6.39	674.4	12.25	12.90
44	3.42	3.31	344.7	2.67	24.60
45	.65	.86	104.4	.21	82.35
46	3.42	20.29	1,761.9	17.63	4.91
47	1.18	5.00	506.7	2.94	17.12
48	2.20	15.36	1,100.3	18.50	7.84
49	.96	5.97	705.0	12.43	12.37
50	4.11	3.93	312.3	3.07	26.77
51	1.80	3.91	457.7	2.33	18.90
52	3.84	2.78	423.6	1.08	20.16
53	.59	1.34	104.1	.21	82.16
54	2.75	21.42	1,258.6	20.14	6.82
55	.87	5.49	672.9	12.22	12.97
56	3.67	3.25	349.4	2.67	24.24
57	.65	2.13	104.9	.29	80.49
58	2.67	17.59	1,475.7	1.10	5.87
59	1.05	3.66	456.7	2.26	19.05
60	3.24	32.19	1,183.6	20.99	7.13
61	.96	5.93	687.7	11.82	12.67
62	4.17	3.54	312.3	3.21	26.81
63	1.94	5.56	470.2	2.86	18.29
64	2.98	3.15	425.0	.91	20.20
65	.46	.42	103.6	.29	83.98

EMISSION RESULTS IN GRAMS PER MILE (PER MINUTE FOR IDLE).
FUEL ECONOMY IN MILES PER GALLON (MINUTES PER GALLON FOR IDLE)

APPENDIX E

LISTING OF MODAL RESULTS ON INDIVIDUAL VEHICLES
WASHINGTON, D.C.

VEHICLE	YEAR	MAKE	MODEL	CID
6009	75	FORD	ECON	351

MODE NO	HC	CO	CO2	NOX	MPG
01	.67	1.87	93.8	.13	89.80
02	6.08	22.57	1,463.2	18.81	5.84
03	1.72	6.13	422.7	3.14	20.27
04	1.81	5.94	418.3	1.08	20.48
05	.68	1.41	95.3	.14	89.11
06	7.68	22.19	1,338.0	11.18	6.35
07	2.90	9.25	423.3	1.12	19.85
08	3.26	18.58	1,029.6	9.54	8.30
09	1.97	9.18	394.6	2.10	21.37
10	2.39	9.42	919.4	11.57	9.42
11	1.53	6.50	457.7	4.83	18.77
12	4.80	6.78	238.6	1.37	33.56
13	2.35	5.16	371.9	1.43	22.91
14	5.70	91.04	1,119.3	18.51	6.93
15	2.20	13.06	549.2	10.92	15.39
16	4.86	13.81	227.8	2.06	33.51
17	2.03	5.66	428.1	4.30	20.01
18	2.39	9.58	937.1	17.58	9.24
19	1.86	6.33	540.8	11.43	15.94
20	3.69	6.74	233.7	1.47	34.67
21	6.43	35.90	526.2	3.08	14.71
22	3.06	18.12	1,160.1	21.67	7.40
23	1.50	5.31	498.0	10.15	17.36
24	5.75	9.72	171.9	.53	43.22
25	1.43	7.53	135.1	.70	58.61
26	3.62	20.07	1,227.3	23.17	6.98
27	1.47	5.34	521.0	11.07	16.61
28	4.27	7.45	177.9	.62	43.70
29	1.32	3.43	344.2	1.72	25.09
30	1.39	7.36	257.0	.30	32.51
31	2.23	8.60	286.5	.50	28.90
32	4.76	14.41	731.8	1.11	11.53
(BAG)	3.11	12.75	630.8	2.35	13.43
(CALC)	3.13	13.53	627.2	7.63	13.48
66	.55	1.11	91.2	.12	93.80
67	4.66	9.38	987.6	.86	8.72
68	2.26	5.18	546.6	.32	15.79
69	1.45	2.01	383.4	.36	22.69
70	1.51	2.82	376.5	1.42	23.01
71	1.20	4.24	448.7	4.11	19.33
72	1.43	4.79	465.1	8.62	18.60

MODE NO	HC	CO	CO2	NOX	MPG
33	1.51	5.90	189.9	1.61	43.52
34	2.69	13.13	1,252.8	17.69	6.92
35	1.67	4.27	376.0	3.93	22.87
36	2.45	7.08	177.3	.18	45.24
37	4.54	21.97	720.0	6.31	11.54
38	2.89	14.15	1,172.0	18.30	7.37
39	1.53	3.66	367.0	3.77	23.50
40	2.58	6.50	224.8	.29	36.50
41	2.10	10.57	314.1	4.14	26.31
42	4.34	48.97	1,340.7	26.64	6.20
43	1.61	5.11	459.2	8.73	18.79
44	4.70	6.64	162.9	.26	47.15
45	1.62	9.00	223.1	2.26	36.62
46	3.48	14.17	1,192.4	13.83	7.24
47	2.46	6.66	612.5	7.19	14.07
48	2.26	10.14	1,039.0	19.44	8.35
49	1.81	5.00	418.4	7.53	20.54
50	4.20	7.38	158.3	.55	48.46
51	1.22	3.40	289.4	.98	29.73
52	2.49	5.23	359.2	.70	23.65
53	1.51	6.73	281.6	3.19	29.87
54	2.21	10.20	1,152.7	20.01	7.54
55	1.62	4.69	421.6	7.35	20.44
56	3.82	6.18	172.0	.26	45.80
57	1.52	4.99	275.4	3.25	30.81
58	3.34	7.27	939.7	11.65	9.22
59	4.02	15.22	860.3	12.73	9.89
60	3.10	13.09	1,041.4	22.73	8.28
61	3.63	5.95	322.8	5.84	25.82
62	2.34	5.89	191.8	.81	42.65
63	1.06	3.73	264.6	1.04	32.41
64	2.50	8.42	355.2	.75	23.58
65	.69	3.33	95.5	.18	86.28

EMISSION RESULTS IN GRAMS PER MILE (PER MINUTE FOR IDLE).
FUEL ECONOMY IN MILES PER GALLON (MINUTES PER GALLON FOR IDLE)

APPENDIX E

LISTING OF MODAL RESULTS ON INDIVIDUAL VEHICLES
WASHINGTON, D.C.

VEHICLE	YEAR	MAKE	MODEL	CID
6010	75	GMC	VAND	350

MODE NO	HC	CO	CO2	NOX	MPG
01	.51	3.06	71.6	.02	113.80
02	5.08	20.94	1,341.1	18.36	6.38
03	1.34	3.45	412.0	2.55	21.04
04	10.67	4.10	267.8	.77	28.81
05	.89	.80	69.6	.05	120.48
06	7.47	18.08	1,288.8	7.44	6.61
07	2.50	28.43	563.9	1.19	14.39
08	2.76	11.95	931.3	9.09	9.25
09	1.33	4.17	395.4	2.23	21.85
10	1.98	6.00	805.5	11.90	10.80
11	1.07	3.50	464.3	5.53	18.75
12	5.25	3.31	197.9	1.45	40.40
13	3.67	8.91	358.6	.96	23.10
14	3.87	41.71	1,015.2	19.75	8.12
15	1.03	6.04	567.9	12.38	15.28
16	2.50	3.15	264.6	3.70	31.99
17	2.49	5.85	412.5	3.26	20.66
18	1.68	9.00	826.7	16.58	10.48
19	.89	5.07	562.0	11.67	15.49
20	5.53	5.26	238.2	2.50	33.62
21	4.78	40.26	533.6	.75	14.50
22	2.26	14.06	996.6	19.37	8.65
23	.82	4.94	558.5	10.63	15.60
24	6.61	4.30	239.9	2.68	33.16
25	.78	2.57	71.3	.04	114.13
26	2.20	10.03	1,055.0	19.73	8.23
27	.80	5.05	565.4	10.85	15.41
28	4.90	3.80	234.6	2.50	34.65
29	4.13	7.29	342.5	.88	24.18
30	7.04	4.18	216.3	.55	36.20
31	6.04	25.43	473.7	.18	16.50
32	5.81	27.14	603.4	.29	13.35
(BAG)	3.14	9.96	599.0	8.38	14.21
(CALC)	3.12	8.89	592.6	8.88	14.39
66	.79	1.31	67.2	.05	123.74
67	6.74	29.05	698.4	.66	11.59
68	2.12	23.11	582.5	.44	14.18
69	1.78	34.07	576.7	.66	13.95
70	1.20	3.31	392.6	1.59	22.10
71	1.01	4.19	451.8	4.07	19.23
72	.75	5.07	519.5	8.66	16.75

MODE NO	HC	CO	CO2	NOX	MPG
33	.49	2.00	73.2	.03	114.02
34	2.44	10.62	1,096.4	16.66	7.91
35	.92	3.79	450.1	4.43	19.34
36	6.87	5.04	207.2	1.25	37.47
37	5.12	31.32	515.5	.50	15.27
38	2.23	10.90	1,033.3	15.36	8.39
39	.94	3.84	459.7	5.57	18.93
40	7.60	6.26	238.1	1.08	32.62
41	.84	1.78	72.1	.06	114.50
42	3.63	31.70	1,151.1	22.48	7.32
43	.87	5.29	568.2	11.35	15.32
44	5.92	5.05	255.4	2.61	31.46
45	.64	2.24	72.8	.08	113.33
46	3.74	11.97	1,152.8	13.20	7.49
47	1.36	5.00	404.7	2.28	21.29
48	1.38	6.68	844.9	14.11	10.32
49	.83	5.01	569.9	10.97	15.29
50	4.19	2.94	233.9	2.56	35.25
51	4.62	6.45	345.2	1.09	23.99
52	11.08	3.99	260.1	.66	29.44
53	.83	1.53	72.3	.03	114.88
54	1.79	8.94	930.0	16.48	9.34
55	.83	5.09	557.2	10.67	15.63
56	6.17	5.39	269.2	2.56	29.86
57	.68	1.45	72.0	.07	116.21
58	3.96	11.46	1,021.2	11.06	8.43
59	1.33	5.96	393.2	2.19	21.82
60	2.08	11.29	941.4	17.39	9.19
61	.86	5.34	565.8	11.39	15.38
62	3.47	3.32	240.2	2.88	34.61
63	4.22	7.01	352.1	1.31	23.57
64	8.87	4.85	285.3	.70	27.64
65	.62	1.24	71.6	.05	117.62

EMISSION RESULTS IN GRAMS PER MILE (PER MINUTE FOR IDLE).
FUEL ECONOMY IN MILES PER GALLON (MINUTES PER GALLON FOR IDLE)

APPENDIX F

LISTING OF CLAYTON KEY MODE AND REPLICATE
EMISSION RESULTS ON INDIVIDUAL VEHICLES

WASHINGTON, D.C.

VEHICLE	MAKE	MODEL	CID	HP		-HIGH SPEED- HC	CO	-LOW SPEED- HC	CO	- IDLE - HC	CO
5011	AMC	HORN	258	24.0	1ST TEST	33	.17	56	.17	180	1.75
					2ND TEST	35	.17	60	.17	185	1.65
5012	BUIC	SKYL	231	24.0	1ST TEST	50	.15	40	.07	110	1.40
					2ND TEST	40	.23	35	.07	110	1.40
5013	BUIC	ELEC	455	30.0	1ST TEST	135	4.10	180	4.90	185	5.90
					2ND TEST	95	2.80	175	4.00	180	5.40
5014	BUIC	ELEC	455	30.0	1ST TEST	100	2.10	130	3.10	130	3.00
					2ND TEST	95	.90	110	1.75	120	2.15
5015	CADI	DEVI	500	30.0	1ST TEST	150	4.70	110	2.50	30	.05
					2ND TEST	130	3.70	100	2.40	30	.04
5016	CHEV	VEGA	140	15.0	1ST TEST	20	.30	20	.30	320	6.00
					2ND TEST	22	.20	22	.20	300	5.00
5017	CHEV	CAMA	250	24.0	1ST TEST	35	.03	170	.30	215	2.60
					2ND TEST	30	.03	40	.05	200	2.60
5018	CHEV	MONT	350	30.0	1ST TEST	20	.04	90	1.40	90	2.00
					2ND TEST	20	.02	75	.09	170	3.00
5019	CHEV	IMPA	350	30.0	1ST TEST	70	.09	25	.07	22	.03
					2ND TEST	30	.07	25	.15	25	.03
5020	CHEV	IMPA	350	30.0	1ST TEST	20	.05	15	.05	15	.05
					2ND TEST	15	.05	15	.05	15	.05
5021	CHEV	CAPR	400	30.0	1ST TEST	25	.05	25	.03	20	.03
					2ND TEST	25	.05	25	.03	25	.03
5022	CHRY	NEWY	440	30.0	1ST TEST	30	.05	20	.03	20	.05
					2ND TEST	20	.05	20	.05	20	.05

HC - PPM/HEX
CO - %

APPENDIX F

LISTING OF CLAYTON KEY MODE AND REPLICATE EMISSION RESULTS ON INDIVIDUAL VEHICLES

WASHINGTON, D.C.

						-HIGH SPEED-		-LOW SPEED-		- IDLE -	
VEHICLE	MAKE	MODEL	CID	HP		HC	CO	HC	CO	HC	CO
5023	DODG	CHAR	360	30.0	1ST TEST	25	.10	20	.04	25	.03
					2ND TEST	25	.07	20	.04	35	.03
5024	DODG	DART	225	24.0	1ST TEST	45	.05	155	1.45	295	10.00
					2ND TEST	50	.05	140	1.70	280	9.90
5025	FORD	MUST	140	15.0	1ST TEST	20	.01	25	.17	35	.70
					2ND TEST	35	.11	35	.02	30	.55
5026	FORD	TORI	351	30.0	1ST TEST	20	.05	21	.05	33	.06
					2ND TEST	20	.05	20	.05	29	.08
5027	FORD	MAVE	250	24.0	1ST TEST	30	.32	25	.15	40	.40
					2ND TEST	20	.40	20	.20	40	.49
5028	FORD	TORI	351	30.0	1ST TEST	50	.25	45	.13	60	.10
					2ND TEST	40	.27	40	.13	60	.13
5029	FORD	LTD	400	30.0	1ST TEST	30	.21	19	.11	31	.08
					2ND TEST	24	.16	19	.13	30	.13
5030	MERC	MARQ	460	30.0	1ST TEST	40	1.60	40	1.55	50	2.30
					2ND TEST	40	1.70	40	1.90	65	3.80
5031	MERC	COUG	351	30.0	1ST TEST	35	.12	19	.04	29	.06
					2ND TEST	30	.09	20	.07	30	.10
5032	OLDS	DELT	350	30.0	1ST TEST	110	3.70	155	1.60	25	.20
					2ND TEST	125	3.60	130	1.20	25	.30
5033	OLDS	CUTL	350	24.0	1ST TEST	90	1.00	25	.03	70	1.20
					2ND TEST	25	.03	25	.03	260	1.20
5034	OLDS	CUST	455	30.0	1ST TEST	23	.03	20	.03	25	.02
					2ND TEST	21	.03	19	.03	25	.03

HC - PPM/HEX
CO - %

APPENDIX F

LISTING OF CLAYTON KEY MODE AND REPLICATE
EMISSION RESULTS ON INDIVIDUAL VEHICLES

WASHINGTON, D.C.

VEHICLE	MAKE	MODEL	CID	HP		-HIGH HC	SPEED- CO	-LOW HC	SPEED- CO	- HC	IDLE - CO
5035	PLYM	FURY	318	30.0	1ST TEST	20	.02	10	.02	10	.02
					2ND TEST	25	.02	20	.02	15	.02
5036	PLYM	VALI	225	24.0	1ST TEST	45	.04.	45	.04	110	2.50
					2ND TEST	40	.04	40	.04	100	2.50
5037	PONT	GRAN	400	30.0	1ST TEST	40	.09	45	.05	50	.04
					2ND TEST	30	.06	38	.04	40	.04
5038	PONT	LEMA	350	24.0	1ST TEST	110	.15	31	.03	125	2.25
					2ND TEST	31	.03	29	.03	100	1.40
5039	PONT	GRAN	400	30.0	1ST TEST	33	.05	40	.15	120	1.70
					2ND TEST	35	.03	30	.07	120	2.00
5040	MERC	CAPR	140	15.0	1ST TEST	40	.10	35	.65	25	.25
					2ND TEST	40	.15	35	.55	30	.25
5041	DATS	B210	085	15.0	1ST TEST	83	.20	87	.16	86	.35
					2ND TEST	69	.20	84	.16	81	.35
5042	HOND	CIVI	091	15.0	1ST TEST	15	.20	10	.15	25	.45
					2ND TEST	15	.20	10	.15	30	.45
5043	TOYO	CORC	097	15.0	1ST TEST	70	.33	40	.60	40	.57
					2ND TEST	70	.29	40	.50	40	.60
5044	VOLK	DASH	090	15.0	1ST TEST	30	.05	40	.03	20	.03
					2ND TEST	30	.05	25	.03	20	.03
5045	VOLK	RABB	090	15:0	1ST TEST	90	1.50	700	.07	400	.33
					2ND TEST	110	1.60	500	2.00	200	.80
6001	CHEV	CUST	250	24.0	1ST TEST	20	.03	15	.03	12	.03
					2ND TEST	20	.03	19	.03	17	.03

HC - PPM/HEX
CO - %

APPENDIX F

LISTING OF CLAYTON KEY MODE AND REPLICATE
EMISSION RESULTS ON INDIVIDUAL VEHICLES

WASHINGTON, D.C.

						-HIGH	SPEED-	-LOW	SPEED-	-	IDLE -
VEHICLE	MAKE	MODEL	CID	HP		HC	CO	HC	CO	HC	CO
6002	CHEV	CUST	350	30.0	1ST TEST	31	.03	25	.03	20	.03
					2ND TEST	30	.03	25	.03	20	.03
6003	CHEV	CUST	350	30.0	1ST TEST	40	.02	25	.02	15	.02
					2ND TEST	30	.02	21	.03	20	.02
6004	CHEV	SCOT	350	24.0	1ST TEST	25	.03	24	.03	20	.02
					2ND TEST	28	.03	25	.03	21	.03
6005	DODG	D100	318	30.0	1ST TEST	60	.16	120	.16	190	2.60
					2ND TEST	50	.16	120	.18	205	3.10
6006	FORD	ECON	300	30.0	1ST TEST	40	.08	30	.05	15	.03
					2ND TEST	30	.07	25	.04	20	.03
6007	FORD	CUST	302	24.0	1ST TEST	40	.06	20	.03	20	.03
					2ND TEST	40	.08	30	.03	20	.03
6008	FORD	CLUB	351	30.0	1ST TEST	30	.10	40	.13	100	.10
					2ND TEST	25	.11	40	.14	95	.09
6009	FORD	ECON	351	30.0	1ST TEST	60	.17	90	.15	170	.35
					2ND TEST	50	.17	90	.15	170	.40
6010	GMC	VAND	350	24.0	1ST TEST	90	.19	130	.19	165	1.10
					2ND TEST	90	.19	120	.18	200	1.00

HC - PPM/HEX
CO - %

Low Speed Driving Cycle

This cycle is similar to the 1975 FTP in that it consists of a cold transient, cold stabilized, and hot transient portions. The hot transient portion follows a ten minute soak. Total driving time, exclusive of the soak, is 1962 seconds. Driving techniques and tolerances are identical to those of the FTP.

Sampling techniques are also identical to those of the FTP although gathering of emissions from the cold transient portion requires two sample bags; one sample bag for the first 240 seconds of the sequence and another for the remaining 412 seconds of this portion. Exhaust emissions from each of the other portions are gathered in individual sample bags.

Calculations of results are done in accordance with those prescribed for the FTP. The mileages and times for use in the calculations are listed below:

Phase	Bag	Time (secs.)	Distance (mi.)	Average Speed (mph)
Cold Transient	1	240	.82	12.28
Cold Transient (Cont.)	2	412	.91	7.97
Cold Stabilized	3	658	2.56	14.01
Hot Transient	4	652	1.73	9.56

APPENDIX G

LISTING OF LOW SPEED CYCLE EMISSIONS AND FUEL ECONOMY RESULTS ON INDIVIDUAL VEHICLES

WASHINGTON, D.C.

VEHICLE NUMBER	YEAR	MAKE	MODEL	CID	TEST TYPE	GRAMS PER MILE HC	CO	CO2	NOXC	MPG FUEL ECONOMY
2076	72	AMC	HORN	258	COLD TRANS (1)	8.20	144.06	706.3	3.64	9.25
					COLD TRANS (2)	3.97	49.98	812.6	3.58	9.82
					COLD STAB.	2.00	18.55	547.5	3.34	15.23
					HOT TRANS.	4.70	29.31	690.3	3.65	11.81
					72 WEIGHTING	3.61	49.21	634.1	3.45	12.27
					75 WEIGHTING	3.31	34.20	617.5	3.46	13.02
2077	72	BUIC	ELEC	455	COLD TRANS (1)	9.46	155.15	1,504.3	10.81	4.99
					COLD TRANS (2)	5.05	40.37	1,505.3	6.75	5.60
					COLD STAB.	2.75	16.28	887.1	7.17	9.63
					HOT TRANS.	4.49	29.65	1,208.7	7.68	6.99
					72 WEIGHTING	4.52	47.93	1,136.2	7.78	7.24
					75 WEIGHTING	3.90	32.96	1,068.1	7.55	7.84
2078	72	CADI	DEVI	472	COLD TRANS (1)	8.57	265.01	1,327.6	2.35	5.01
					COLD TRANS (2)	11.84	233.93	1,363.9	3.43	5.01
					COLD STAB.	6.53	108.91	907.0	2.33	8.07
					HOT TRANS.	11.10	179.13	1,078.4	2.63	6.36
					72 WEIGHTING	8.05	165.27	1,084.3	2.57	6.48
					75 WEIGHTING	8.23	149.28	1,022.7	2.50	6.91
2079	72	CHEV	VEGA	140	COLD TRANS (1)	8.31	60.57	684.6	3.73	11.01
					COLD TRANS (2)	2.75	30.19	827.6	2.86	10.04
					COLD STAB.	1.38	20.93	508.6	3.67	16.26
					HOT TRANS.	3.82	32.95	663.0	3.09	12.21
					72 WEIGHTING	3.00	30.47	609.9	3.51	13.30
					75 WEIGHTING	2.63	27.79	587.6	3.46	13.87
2080	72	CHEV	CHEV	350	COLD TRANS (1)	7.21	79.24	866.9	4.54	8.75
					COLD TRANS (2)	5.42	88.85	839.4	3.84	8.91
					COLD STAB.	3.35	41.08	596.0	4.25	13.22
					HOT TRANS.	5.42	75.40	740.8	4.14	10.12
					72 WEIGHTING	4.53	58.51	699.4	4.22	11.01
					75 WEIGHTING	4.33	56.46	673.7	4.20	11.43
2081	72	CHEV	CONC	350	COLD TRANS (1)	10.85	198.48	1,134.1	4.36	5.99
					COLD TRANS (2)	5.63	81.72	1,288.3	3.38	6.18
					COLD STAB.	2.87	26.06	838.3	4.09	9.99
					HOT TRANS.	4.27	34.49	1,093.5	3.73	7.64
					72 WEIGHTING	4.98	70.82	990.3	3.99	7.94
					75 WEIGHTING	4.10	47.24	962.3	3.96	8.45
2082	72	CHEV	NOVA	307	COLD TRANS (1)	13.76	73.87	881.8	4.06	8.52
					COLD TRANS (2)	7.50	54.75	935.4	3.32	8.49
					COLD STAB.	4.28	17.47	608.0	3.91	13.68
					HOT TRANS.	6.49	30.00	827.6	3.85	9.91
					72 WEIGHTING	6.77	36.16	729.8	3.82	10.98
					75 WEIGHTING	5.86	28.38	710.8	3.86	11.47

APPENDIX G

LISTING OF LOW SPEED CYCLE EMISSIONS AND FUEL
ECONOMY RESULTS ON INDIVIDUAL VEHICLES

WASHINGTON, D.C.

VEHICLE NUMBER	YEAR	MAKE	MODEL	CID	TEST TYPE	- G R A M S P E R M I L E - HC	CO	CO2	NOXC	MPG FUEL ECONOMY
2083	72	CHEV	IMPA	350	COLD TRANS (1)	9.02	83.76	860.9	4.35	8.69
					COLD TRANS (2)	6.58	109.54	859.2	3.42	8.43
					COLD STAB.	3.64	36.38	628.0	3.57	12.74
					HOT TRANS.	6.36	59.83	769.7	3.76	10.04
					72 WEIGHTING	5.29	60.96	721.6	3.69	10.64
					75 WEIGHTING	4.97	52.34	700.8	3.66	11.11
2084	72	CHEV	CAPR	400	COLD TRANS (1)	6.98	87.02	983.4	5.26	7.77
					COLD TRANS (2)	4.72	44.79	1,303.5	3.84	6.39
					COLD STAB.	2.54	17.92	822.9	4.86	10.33
					HOT TRANS.	3.27	24.10	1,085.5	4.16	7.82
					72 WEIGHTING	3.85	36.83	955.5	4.72	8.65
					75 WEIGHTING	3.27	27.47	940.3	4.64	8.93
2085	72	DODG	CORO	318	COLD TRANS (1)	7.36	62.23	853.1	4.53	9.11
					COLD TRANS (2)	7.83	51.72	890.3	5.09	8.90
					COLD STAB.	4.14	15.72	620.1	5.52	13.49
					HOT TRANS.	5.83	28.46	773.9	5.21	10.60
					72 WEIGHTING	5.54	32.24	722.0	5.24	11.23
					75 WEIGHTING	5.13	25.75	699.3	5.33	11.74
2086	72	FORD	PINT	122	COLD TRANS (1)	9.97	129.46	372.9	3.37	14.59
					COLD TRANS (2)	10.52	163.82	508.2	4.71	11.11
					COLD STAB.	5.78	83.52	341.5	4.19	18.07
					HOT TRANS.	7.43	125.47	418.5	4.52	13.88
					72 WEIGHTING	7.58	109.34	382.8	4.15	15.33
					75 WEIGHTING	6.93	104.26	376.9	4.25	15.78
2087	72	FORD	TORO	351	COLD TRANS (1)	7.17	108.21	936.0	3.50	7.86
					COLD TRANS (2)	4.45	72.04	1,096.9	2.65	7.25
					COLD STAB.	2.72	25.67	700.3	3.69	11.85
					HOT TRANS.	6.82	44.78	999.3	3.15	8.13
					72 WEIGHTING	3.94	51.28	829.5	3.43	9.62
					75 WEIGHTING	4.18	41.07	824.6	3.45	9.83
2088	72	FORD	MAVE	200	COLD TRANS (1)	8.12	54.76	599.0	4.45	12.48
					COLD TRANS (2)	4.48	72.14	671.9	4.06	11.10
					COLD STAB.	2.80	30.50	466.8	4.31	16.95
					HOT TRANS.	4.42	42.00	581.0	4.82	13.42
					72 WEIGHTING	4.17	43.97	535.6	4.28	14.36
					75 WEIGHTING	3.76	38.93	522.6	4.41	14.90
2089	72	FORD	LTD	351	COLD TRANS (1)	7.01	110.79	1,195.2	5.58	6.37
					COLD TRANS (2)	3.61	22.53	1,360.3	7.27	6.30
					COLD STAB.	2.32	8.22	845.3	6.78	10.25
					HOT TRANS.	4.59	20.22	1,139.7	7.65	7.48
					72 WEIGHTING	3.49	30.86	1,021.4	6.65	8.21
					75 WEIGHTING	3.34	20.71	988.6	6.92	8.60

APPENDIX G

LISTING OF LOW SPEED CYCLE EMISSIONS AND FUEL ECONOMY RESULTS ON INDIVIDUAL VEHICLES

WASHINGTON, D.C.

VEHICLE NUMBER	YEAR	MAKE	MODEL	CID	TEST TYPE	GRAMS PER MILE HC	GRAMS PER MILE CO	GRAMS PER MILE CO2	GRAMS PER MILE NOXC	MPG FUEL ECONOMY
2090	72	FORD	STAW	400	COLD TRANS (1)	10.48	201.32	1,043.6	4.04	6.37
					COLD TRANS (2)	6.13	144.42	1,143.0	6.58	6.38
					COLD STAB.	3.74	61.63	808.2	6.55	9.68
					HOT TRANS.	5.46	73.95	1,010.0	6.90	7.76
					72 WEIGHTING	5.53	105.89	924.2	6.08	8.00
					75 WEIGHTING	4.90	83.50	904.5	6.43	8.44
2091	72	MERC	MARQ	429	COLD TRANS (1)	16.80	281.12	886.3	3.04	6.42
					COLD TRANS (2)	20.45	503.83	930.1	2.46	4.96
					COLD STAB.	10.72	245.05	628.2	2.96	8.47
					HOT TRANS.	15.79	382.18	788.1	2.97	6.16
					72 WEIGHTING	13.95	306.84	741.6	2.87	7.00
					75 WEIGHTING	13.27	303.14	713.7	2.92	7.20
2092	72	OLDS	DELT	350	COLD TRANS (1)	15.82	282.85	1,093.7	4.34	5.58
					COLD TRANS (2)	10.50	257.92	1,026.3	3.75	6.06
					COLD STAB.	5.64	109.80	710.1	4.25	9.85
					HOT TRANS.	9.14	133.15	936.1	4.27	7.55
					72 WEIGHTING	8.62	174.30	850.5	4.16	7.70
					75 WEIGHTING	7.72	142.89	822.4	4.21	8.28
2093	72	PLYM	DUST	225	COLD TRANS (1)	9.73	206.09	551.3	3.20	9.79
					COLD TRANS (2)	4.30	120.50	599.6	3.82	11.06
					COLD STAB.	2.40	44.18	428.4	3.94	17.56
					HOT TRANS.	3.94	58.75	553.0	4.00	13.49
					72 WEIGHTING	4.20	91.32	488.2	3.78	13.76
					75 WEIGHTING	3.53	67.80	482.7	3.88	14.78
2094	72	PLYM	SUBU	360	COLD TRANS (1)	10.92	217.31	988.0	4.45	6.50
					COLD TRANS (2)	9.06	308.08	975.4	5.51	5.96
					COLD STAB.	5.74	156.06	691.4	6.17	9.29
					HOT TRANS.	7.80	236.91	895.0	6.76	6.87
					72 WEIGHTING	7.44	200.02	808.3	5.70	7.74
					75 WEIGHTING	6.94	193.55	788.4	6.10	7.96
2095	72	PONT	CATA	400	COLD TRANS (1)	61.75	177.06	972.0	3.59	6.13
					COLD TRANS (2)	62.67	192.74	1,005.9	3.57	5.88
					COLD STAB.	36.33	67.23	704.2	2.85	9.59
					HOT TRANS.	47.10	106.47	822.8	3.57	7.78
					72 WEIGHTING	46.78	114.85	819.4	3.14	7.73
					75 WEIGHTING	43.29	96.72	781.0	3.14	8.29
2096	72	PONT	LEMA	350	COLD TRANS (1)	20.63	179.47	835.3	2.86	7.50
					COLD TRANS (2)	17.54	272.43	880.3	1.86	6.50
					COLD STAB.	7.56	121.56	619.2	3.13	10.64
					HOT TRANS.	11.09	189.19	760.5	2.83	8.12
					72 WEIGHTING	12.18	164.63	715.9	2.81	8.76
					75 WEIGHTING	10.36	155.62	693.2	2.92	9.14

APPENDIX G

LISTING OF LOW SPEED CYCLE EMISSIONS AND FUEL ECONOMY RESULTS ON INDIVIDUAL VEHICLES

WASHINGTON, D.C.

VEHICLE NUMBER	YEAR	MAKE	MODEL	CID	TEST TYPE	GRAMS PER MILE HC	CO	CO2	NOXC	MPG FUEL ECONOMY
2097	72	DATS	510	097	COLD TRANS (1)	8.82	32.45	449.0	4.28	16.82
					COLD TRANS (2)	7.01	38.54	440.3	3.75	16.96
					COLD STAB.	3.35	16.96	329.9	4.18	24.18
					HOT TRANS.	5.74	28.73	400.6	3.60	19.14
					72 WEIGHTING	5.17	24.50	376.1	4.11	20.60
					75 WEIGHTING	4.68	22.90	366.0	4.01	21.29
2098	72	TOYO	CORL	097	COLD TRANS (1)	5.90	42.58	369.3	3.08	19.51
					COLD TRANS (2)	5.47	44.53	362.1	2.15	19.75
					COLD STAB.	3.32	24.23	247.7	2.09	29.96
					HOT TRANS.	4.91	32.72	298.6	2.28	24.28
					72 WEIGHTING	4.27	32.04	295.2	2.29	24.74
					75 WEIGHTING	4.09	29.54	279.8	2.22	26.19
2099	72	VOLK	SUPE	097	COLD TRANS (1)	9.85	105.10	452.8	3.40	13.67
					COLD TRANS (2)	4.71	107.40	592.5	3.31	11.43
					COLD STAB.	2.43	48.69	397.2	3.01	18.44
					HOT TRANS.	4.37	85.11	505.8	2.78	13.59
					72 WEIGHTING	4.33	71.93	449.2	3.15	15.41
					75 WEIGHTING	3.69	67.05	444.5	3.02	15.81
2100	72	VOLK	SUPE	097	COLD TRANS (1)	7.21	70.47	388.4	2.62	17.00
					COLD TRANS (2)	6.09	87.71	426.1	2.03	15.22
					COLD STAB.	5.21	61.82	335.2	2.01	19.77
					HOT TRANS.	8.46	84.07	430.2	2.10	15.07
					72 WEIGHTING	5.78	68.97	364.7	2.13	18.07
					75 WEIGHTING	6.20	70.01	369.7	2.08	17.77
5011	75	AMC	HORN	258	COLD TRANS (1)	5.73	112.06	801.2	3.46	8.91
					COLD TRANS (2)	3.34	37.96	791.0	3.19	10.30
					COLD STAB.	5.30	13.78	597.9	3.41	13.95
					HOT TRANS.	2.74	14.35	676.8	3.19	12.54
					72 WEIGHTING	4.96	37.69	677.7	3.37	11.79
					75 WEIGHTING	4.56	24.19	650.3	3.34	12.63
5012	75	BUIC	SKYL	231	COLD TRANS (1)	9.09	81.34	767.8	7.09	9.60
					COLD TRANS (2)	3.61	33.46	930.0	6.40	8.93
					COLD STAB.	1.08	5.09	619.5	6.17	14.07
					HOT TRANS.	2.05	12.35	806.4	6.27	10.66
					72 WEIGHTING	3.15	25.68	713.7	6.40	11.61
					75 WEIGHTING	2.19	15.61	703.0	6.29	12.08
5013	75	BUIC	ELEC	455	COLD TRANS (1)	6.42	71.52	935.1	5.45	8.31
					COLD TRANS (2)	1.73	16.17	1,362.1	1.87	6.37
					COLD STAB.	.28	2.12	816.0	1.28	10.82
					HOT TRANS.	1.08	10.45	1,128.9	1.83	7.72
					72 WEIGHTING	1.76	18.37	954.6	2.20	8.97
					75 WEIGHTING	1.10	11.02	947.5	1.80	9.16

APPENDIX G

LISTING OF LOW SPEED CYCLE EMISSIONS AND FUEL ECONOMY RESULTS ON INDIVIDUAL VEHICLES

WASHINGTON, D.C.

VEHICLE NUMBER	YEAR	MAKE	MODEL	CID	TEST TYPE	- G R A M S P E R M I L E -				MPG
						HC	CO	CO2	NOXC	FUEL ECONOMY
5014	75	BUIC	ELEC	455	COLD TRANS (1)	6.98	85.32	1,150.6	7.06	6.79
					COLD TRANS (2)	3.65	38.64	1,264.3	2.14	6.64
					COLD STAB.	.91	8.04	870.1	1.77	10.02
					HOT TRANS.	2.52	24.78	1,120.3	2.20	7.60
					72 WEIGHTING	2.65	29.31	1,007.3	2.86	8.36
					75 WEIGHTING	2.02	21.03	986.6	2.33	8.65
5015	75	CADI	DEVI	500	COLD TRANS (1)	8.92	60.62	1,311.9	4.81	6.18
					COLD TRANS (2)	.39	5.25	1,335.0	3.60	6.60
					COLD STAB.	.52	4.54	883.3	2.39	9.95
					HOT TRANS.	1.36	12.16	1,187.0	3.52	7.33
					72 WEIGHTING	2.10	15.41	1,061.0	3.11	8.13
					75 WEIGHTING	1.39	10.96	1,029.5	2.96	8.44
5016	75	CHEV	VEGA	140	COLD TRANS (1)	5.18	107.82	689.2	1.74	10.14
					COLD TRANS (2)	2.92	57.81	752.1	1.65	10.41
					COLD STAB.	1.25	32.98	488.5	.92	16.31
					HOT TRANS.	2.82	54.16	560.0	1.16	13.57
					72 WEIGHTING	2.35	52.55	582.8	1.23	13.19
					75 WEIGHTINC	2.08	46.26	545.5	1.11	14.20
5017	75	CHEV	CAMA	250	COLD TRANS (1)	5.87	55.46	802.6	3.08	9.77
					COLD TRANS (2)	1.45	2.50	909.1	2.78	9.67
					COLD STAB.	.28	.38	555.9	1.17	15.93
					HOT TRANS.	.52	1.15	723.6	1.70	12.21
					72 WEIGHTING	1.60	11.36	678.0	1.88	12.66
					75 WEIGHTING	.90	5.27	646.9	1.59	13.48
5018	75	CHEV	MONT	350	COLD TRANS (1)	6.28	120.37	857.8	6.23	8.32
					COLD TRANS (2)	4.78	94.51	929.7	4.00	8.11
					COLD STAB.	1.82	33.49	649.6	3.53	12.53
					HOT TRANS.	1.76	31.52	824.7	3.66	10.08
					72 WEIGHTING	3.30	63.04	748.8	4.15	10.34
					75 WEIGHTING	2.44	45.74	732.5	3.82	10.93
5019	75	CHEV	IMPA	350	COLD TRANS (1)	5.93	70.96	1,094.3	2.51	7.24
					COLD TRANS (2)	.91	1.71	1,146.0	1.87	7.70
					COLD STAB.	.40	.64	748.9	1.55	11.81
					HOT TRANS.	.97	2.97	949.0	1.89	9.27
					72 WEIGHTING	1.56	14.31	899.2	1.80	9.58
					75 WEIGHTING	1.03	7.05	859.5	1.74	10.15
5020	75	CHEV	IMPA	350	COLD TRANS (1)	9.51	67.42	1,092.4	3.90	7.22
					COLD TRANS (2)	1.23	7.29	1,015.1	1.41	8.61
					COLD STAB.	.28	.67	725.4	1.79	12.20
					HOT TRANS.	.69	4.46	884.9	1.98	9.93
					72 WEIGHTING	2.24	14.84	857.0	2.11	10.00
					75 WEIGHTING	1.21	7.63	818.6	1.97	10.64

APPENDIX G

LISTING OF LOW SPEED CYCLE EMISSIONS AND FUEL ECONOMY RESULTS ON INDIVIDUAL VEHICLES

WASHINGTON, D.C.

VEHICLE NUMBER	YEAR	MAKE	MODEL	CID	TEST TYPE	- G R A M S P E R M I L E - HC	CO	CO2	NOXC	MPG FUEL ECONOMY
5021	75	CHEV	CAPR	400	COLD TRANS (1)	11.35	174.76	1,315.6	3.64	5.45
					COLD TRANS (2)	.46	.47	1,275.2	4.82	6.94
					COLD STAB.	.26	.08	873.0	4.27	10.15
					HOT TRANS.	.36	2.54	1,104.2	5.75	8.00
					72 WEIGHTING	2.42	33.55	1,042.9	4.27	8.04
					75 WEIGHTING	1.21	15.04	999.2	4.61	8.64
5022	75	CHRY	NEWY	440	COLD TRANS (1)	16.19	326.86	1,349.2	3.07	4.63
					COLD TRANS (2)	2.09	50.08	1,609.8	2.15	5.23
					COLD STAB.	.35	8.45	1,034.9	1.82	8.45
					HOT TRANS.	1.16	7.21	1,372.5	2.69	6.39
					72 WEIGHTING	3.75	78.14	1,216.9	2.13	6.56
					75 WEIGHTING	2.00	38.13	1,190.7	2.15	7.06
5023	75	DODG	CHAR	360	COLD TRANS (1)	26.63	127.40	1,030.2	3.90	6.75
					COLD TRANS (2)	2.59	2.48	1,290.1	3.57	6.81
					COLD STAB.	.73	.47	789.5	3.73	11.20
					HOT TRANS.	2.21	3.52	1,085.8	2.94	8.08
					72 WEIGHTING	6.07	25.16	941.7	3.73	8.87
					75 WEIGHTING	3.36	11.78	923.1	3.55	9.32
5024	75	DODG	DART	225	COLD TRANS (1)	12.98	468.32	647.6	4.04	6.23
					COLD TRANS (2)	11.41	695.80	637.0	3.70	5.02
					COLD STAB.	5.10	365.98	368.9	2.27	9.24
					HOT TRANS.	8.47	527.41	563.6	3.83	6.25
					72 WEIGHTING	7.95	455.51	479.1	2.91	7.27
					75 WEIGHTING	7.10	441.58	461.0	2.90	7.53
5025	75	FORD	MUST	140	COLD TRANS (1)	4.39	122.23	743.1	3.17	9.35
					COLD TRANS (2)	1.90	37.43	763.8	2.27	10.71
					COLD STAB.	.91	11.98	540.9	1.75	15.78
					HOT TRANS.	1.32	17.72	675.9	2.35	12.53
					72 WEIGHTING	1.78	38.45	626.8	2.13	12.81
					75 WEIGHTING	1.38	24.68	608.9	2.05	13.61
5026	75	FORD	TORI	351	COLD TRANS (1)	5.51	115.09	1,185.0	3.80	6.41
					COLD TRANS (2)	2.19	16.69	1,368.6	3.31	6.33
					COLD STAB.	1.03	5.78	882.3	2.01	9.92
					HOT TRANS.	2.00	8.02	1,156.8	3.04	7.54
					72 WEIGHTING	2.13	28.99	1,043.3	2.63	8.10
					75 WEIGHTING	1.72	16.27	1,014.6	2.51	8.49
5027	75	FORD	MAVE	250	COLD TRANS (1)	5.00	69.28	870.7	1.98	8.91
					COLD TRANS (2)	.36	29.87	826.9	8.05	10.14
					COLD STAB.	1.26	11.74	645.1	1.64	13.29
					HOT TRANS.	2.35	14.71	763.6	2.02	11.17
					72 WEIGHTING	1.78	26.58	726.8	3.06	11.46
					75 WEIGHTING	1.73	18.81	707.4	2.34	11.95

APPENDIX G

LISTING OF LOW SPEED CYCLE EMISSIONS AND FUEL ECONOMY RESULTS ON INDIVIDUAL VEHICLES

WASHINGTON, D.C.

VEHICLE NUMBER	YEAR	MAKE	MODEL	CID	TEST TYPE	- G R A M S P E R M I L E - HC	CO	CO2	NOXC	MPG FUEL ECONOMY
5028	75	FORD	TORI	351	COLD TRANS (1)	7.31	91.73	1,254.0	3.92	6.24
					COLD TRANS (2)	2.54	29.18	1,230.4	2.82	6.91
					COLD STAB.	1.37	6.96	805.3	2.16	10.81
					HOT TRANS.	2.79	10.03	1,025.4	2.89	8.45
					72 WEIGHTING	2.75	27.88	981.3	2.64	8.58
					75 WEIGHTING	2.29	16.66	931.6	2.53	9.19
5029	75	FORD	LTD	400	COLD TRANS (1)	4.35	51.69	1,585.9	3.01	5.28
					COLD TRANS (2)	1.39	10.08	1,558.5	2.76	5.62
					COLD STAB.	.73	6.11	1,075.3	2.11	8.16
					HOT TRANS.	1.94	12.13	1,332.4	3.05	6.53
					72 WEIGHTING	1.56	15.66	1,275.4	2.42	6.80
					75 WEIGHTING	1.37	11.60	1,220.4	2.45	7.14
5030	75	MERC	MARQ	460	COLD TRANS (1)	7.03	153.69	1,346.7	4.00	5.51
					COLD TRANS (2)	3.63	164.78	1,460.4	2.43	5.12
					COLD STAB.	1.56	61.14	918.6	2.00	8.70
					HOT TRANS.	4.81	98.02	1,237.3	3.06	6.31
					72 WEIGHTING	3.04	100.81	1,115.4	2.47	6.91
					75 WEIGHTING	2.94	86.68	1,076.5	2.44	7.26
5031	75	MERC	COUG	351	COLD TRANS (1)	6.36	102.87	1,101.9	4.41	6.91
					COLD TRANS (2)	2.19	18.09	1,331.3	3.73	6.49
					COLD STAB.	1.34	7.09	856.5	2.76	10.18
					HOT TRANS.	2.95	13.81	1,115.6	3.83	7.74
					72 WEIGHTING	2.48	27.73	1,004.1	3.28	8.40
					75 WEIGHTING	2.20	17.51	979.5	3.23	8.75
5032	75	OLDS	DELT	350	COLD TRANS (1)	15.74	105.24	887.3	1.65	8.05
					COLD TRANS (2)	2.19	18.63	1,000.1	1.47	8.56
					COLD STAB.	.61	10.60	688.6	1.13	12.55
					HOT TRANS.	1.65	29.77	831.8	1.20	10.04
					72 WEIGHTING	3.84	30.39	792.7	1.30	10.41
					75 WEIGHTING	2.24	23.52	766.2	1.22	10.95
5033	75	OLDS	CUTL	350	COLD TRANS (1)	7.81	61.26	765.0	1.64	10.01
					COLD TRANS (2)	.45	.48	998.6	2.26	8.86
					COLD STAB.	1.13	2.66	501.8	.95	17.43
					HOT TRANS.	.73	3.95	684.7	1.66	12.80
					72 WEIGHTING	2.26	13.40	657.5	1.36	12.95
					75 WEIGHTING	1.52	7.57	610.8	1.29	14.14
5034	75	OLDS	CUST	455	COLD TRANS (1)	4.26	23.43	753.5	2.13	11.04
					COLD TRANS (2)	1.48	10.52	938.7	3.16	9.24
					COLD STAB.	.37	3.12	503.5	1.31	17.42
					HOT TRANS.	1.09	15.09	972.4	2.85	8.88
					72 WEIGHTING	1.35	8.58	643.6	1.86	13.42
					75 WEIGHTING	.95	8.22	671.5	1.90	12.91

APPENDIX G

LISTING OF LOW SPEED CYCLE EMISSIONS AND FUEL
ECONOMY RESULTS ON INDIVIDUAL VEHICLES

WASHINGTON, D.C.

VEHICLE NUMBER	YEAR	MAKE	MODEL	CID	TEST TYPE	- GRAMS PER MILE - HC	CO	CO2	NOXC	MPG FUEL ECONOMY
5035	75	PLYM	FURY	318	COLD TRANS (1)	11.34	225.79	1,038.4	3.53	6.21
					COLD TRANS (2)	.36	4.07	1,375.3	2.56	6.41
					COLD STAB.	.15	.73	843.0	3.30	10.51
					HOT TRANS.	.52	2.80	1,119.7	3.28	7.88
					72 WEIGHTING	2.33	44.46	993.3	3.18	8.29
					75 WEIGHTING	1.17	20.01	971.2	3.24	8.82
5036	75	PLYM	VALI	225	COLD TRANS (1)	8.51	71.64	797.3	4.43	9.47
					COLD TRANS (2)	6.78	84.25	783.1	2.52	9.47
					COLD STAB.	1.36	26.01	494.7	3.70	16.44
					HOT TRANS.	2.44	28.72	655.0	2.80	12.53
					72 WEIGHTING	3.87	47.09	613.7	3.59	12.68
					75 WEIGHTING	2.69	35.70	582.7	3.44	13.71
5037	75	PONT	GRAN	400	COLD TRANS (1)	12.70	74.25	1,266.4	3.65	6.23
					COLD TRANS (2)	2.61	8.69	1,229.1	1.97	7.09
					COLD STAB.	1.32	2.54	809.8	2.23	10.85
					HOT TRANS.	2.51	7.76	1,055.6	2.97	8.25
					72 WEIGHTING	3.77	17.55	986.0	2.45	8.65
					75 WEIGHTING	2.64	10.19	942.1	2.49	9.18
5038	75	PONT	LEMA	350	COLD TRANS (1)	9.42	99.70	1,034.6	2.46	7.26
					COLD TRANS (2)	2.67	41.95	1,180.8	1.69	7.07
					COLD STAB.	.34	2.45	738.5	1.60	11.93
					HOT TRANS.	1.00	11.83	986.1	2.05	8.80
					72 WEIGHTING	2.57	29.42	888.9	1.78	9.41
					75 WEIGHTING	1.44	16.20	860.1	1.78	9.97
5039	75	PONT	GRAN	400	COLD TRANS (1)	9.12	101.92	1,147.5	3.52	6.64
					COLD TRANS (2)	5.26	112.92	1,227.0	3.56	6.24
					COLD STAB.	1.86	19.74	807.7	2.78	10.50
					HOT TRANS.	3.71	70.52	1,047.8	3.82	7.58
					72 WEIGHTING	3.97	55.21	961.6	3.09	8.36
					75 WEIGHTING	3.19	46.66	929.0	3.15	8.76
5040	76	MERC	CAPR	140	COLD TRANS (1)	2.07	50.41	794.0	2.53	10.09
					COLD TRANS (2)	1.10	16.70	748.5	1.72	11.40
					COLD STAB.	.67	7.51	516.0	1.36	16.75
					HOT TRANS.	1.18	12.30	686.0	1.75	12.52
					72 WEIGHTING	1.03	17.66	618.5	1.66	13.66
					75 WEIGHTING	.94	12.97	599.1	1.58	14.26
5041	75	DATS	B210	085	COLD TRANS (1)	3.45	52.13	577.5	3.97	13.24
					COLD TRANS (2)	1.98	11.36	556.3	2.28	15.29
					COLD STAB.	4.23	5.03	364.5	3.64	23.00
					HOT TRANS.	5.96	8.06	441.4	2.69	18.76
					72 WEIGHTING	3.60	15.37	445.9	3.41	18.43
					75 WEIGHTING	4.35	10.17	417.2	3.32	19.87

APPENDIX G

LISTING OF LOW SPEED CYCLE EMISSIONS AND FUEL ECONOMY RESULTS ON INDIVIDUAL VEHICLES

WASHINGTON, D.C.

VEHICLE NUMBER	YEAR	MAKE	MODEL	CID	TEST TYPE	HC (GRAMS PER MILE)	CO (GRAMS PER MILE)	CO2 (GRAMS PER MILE)	NOXC (GRAMS PER MILE)	MPG FUEL ECONOMY
5042	75	HOND	CIVI	091	COLD TRANS (1)	11.30	43.41	514.0	1.56	14.36
					COLD TRANS (2)	1.52	7.45	501.5	1.46	17.13
					COLD STAB.	.67	4.05	334.1	1.50	25.91
					HOT TRANS.	1.44	5.73	419.0	1.60	20.53
					72 WEIGHTING	2.88	12.29	404.0	1.50	20.54
					75 WEIGHTING	1.79	7.98	383.6	1.52	22.09
5043	75	TOYO	CORO	097	COLD TRANS (1)	4.75	43.15	431.8	3.19	17.25
					COLD TRANS (2)	2.34	30.47	545.9	2.06	14.76
					COLD STAB.	1.35	15.74	373.0	2.33	22.08
					HOT TRANS.	2.93	20.87	464.3	2.12	17.53
					72 WEIGHTING	2.21	24.10	420.9	2.44	19.05
					75 WEIGHTING	2.08	20.51	414.5	2.33	19.58
5044	75	VOLK	DASH	090	COLD TRANS (1)	14.20	130.21	745.8	.86	8.91
					COLD TRANS (2)	.38	.74	781.3	.76	11.33
					COLD STAB.	.24	.31	497.5	.78	17.79
					HOT TRANS.	.60	1.13	613.3	1.67	14.38
					72 WEIGHTING	2.94	25.23	605.1	.79	13.57
					75 WEIGHTING	1.48	11.21	570.4	.99	14.97
5045	75	VOLK	RABB	090	COLD TRANS (1)	11.67	128.80	453.5	2.00	12.80
					COLD TRANS (2)	8.53	36.52	487.1	2.17	15.53
					COLD STAB.	5.04	28.39	355.1	2.29	21.36
					HOT TRANS.	8.79	35.60	447.2	2.28	16.72
					72 WEIGHTING	7.05	49.31	401.9	2.21	17.69
					75 WEIGHTING	6.76	39.04	396.4	2.25	18.52

High Speed Driving Cycle

This cycle is similar to the 1975 FTP in that it consists of a cold transient, cold stabilized, and hot transient portions. The hot transient portion follows a ten minute soak. Total driving time, exclusive of the soak, is 1918 seconds. Driving techniques and tolerances are identical to those of the FTP. Sampling techniques are also identical to those of the FTP; exhaust emissions and background air from each of the portions are gathered in individual sample bags.

Calculations of results are done in accordance with those prescribed for the FTP. The mileages and times for use in the calculations are listed below:

Phase	Bag	Time (secs.)	Distance (mi.)	Average Speed (mph)
Cold Transient	1	520	3.835	26.550
Cold Stabilized	2	878	9.773	40.072
Hot Transient	3	520	3.835	26.550

APPENDIX H

LISTING OF HIGH SPEED CYCLE EMISSION AND FUEL

ECONOMY RESULTS ON INDIVIDUAL VEHICLES
WASHINGTON, D.C.

VEHICLE NUMBER	YEAR	MAKE	MODEL	CID	TEST TYPE	- GRAMS PER MILE - HC	CO	CO2	NOXC	MPG FUEL ECONOMY
2076	72	AMC	HORN	258	COLD TRANS	36.98	82.64	453.5	4.29	12.66
					COLD STAB	23.65	45.29	396.6	4.62	16.35
					HOT TRANS	22.00	62.42	425.1	4.31	14.96
					72 WEIGHTING	27.41	55.82	412.7	4.52	15.11
					75 WEIGHTING	25.00	52.57	408.1	4.53	15.57
2077	72	BUIC	ELEC	455	COLD TRANS	3.91	41.15	829.2	10.23	9.79
					COLD STAB	1.49	5.94	579.1	10.23	14.96
					HOT TRANS	2.57	10.43	646.9	10.14	13.21
					72 WEIGHTING	2.17	15.86	649.6	10.23	13.02
					75 WEIGHTING	1.96	10.92	620.3	10.21	13.78
2078	72	CADI	DEVI	472	COLD TRANS	4.23	107.63	907.8	3.29	8.14
					COLD STAB	1.18	20.70	677.7	3.50	12.43
					HOT TRANS	2.51	49.81	738.8	3.21	10.75
					72 WEIGHTING	2.04	45.20	742.6	3.44	10.82
					75 WEIGHTING	1.76	35.91	715.4	3.43	11.41
2079	72	CHEV	VEGA	140	COLD TRANS	2.22	28.11	436.9	4.67	18.18
					COLD STAB	1.20	21.85	341.4	4.34	23.38
					HOT TRANS	2.45	23.43	360.4	3.49	21.91
					72 WEIGHTING	1.49	23.61	368.3	4.43	21.64
					75 WEIGHTING	1.52	22.86	356.0	4.24	22.37
2080	72	CHEV	CHEV	350	COLD TRANS	3.80	41.48	576.4	4.60	13.57
					COLD STAB	1.99	14.61	468.0	5.80	17.85
					HOT TRANS	2.91	25.16	498.7	5.32	16.21
					72 WEIGHTING	2.50	22.18	498.5	5.46	16.39
					75 WEIGHTING	2.36	19.56	486.0	5.57	16.93
2081	72	CHEV	CONC	350	COLD TRANS	3.48	51.24	693.6	5.69	11.30
					COLD STAB	1.77	16.61	542.3	6.20	15.46
					HOT TRANS	2.39	21.93	608.3	5.46	13.64
					72 WEIGHTING	2.25	26.37	584.9	6.06	14.01
					75 WEIGHTING	2.08	21.66	571.2	6.02	14.50
2082	72	CHEV	NOVA	307	COLD TRANS	4.61	26.78	523.2	4.01	15.30
					COLD STAB	2.27	9.97	373.4	2.75	22.40
					HOT TRANS	3.08	10.38	450.2	2.64	18.63
					72 WEIGHTING	2.93	14.71	415.6	3.11	19.81
					75 WEIGHTING	2.69	12.07	403.9	2.89	20.57
2083	72	CHEV	IMPA	350	COLD TRANS	4.62	53.35	682.5	6.23	11.36
					COLD STAB	1.84	21.93	545.9	5.41	15.14
					HOT TRANS	3.35	32.52	551.0	5.46	14.48
					72 WEIGHTING	2.63	30.78	584.4	5.64	13.84
					75 WEIGHTING	2.42	27.44	563.3	5.52	14.45

APPENDIX H

LISTING OF HIGH SPEED CYCLE EMISSION AND FUEL

ECONOMY RESULTS ON INDIVIDUAL VEHICLES
WASHINGTON, D.C.

VEHICLE NUMBER	YEAR	MAKE	MODEL	CID	TEST TYPE	- GRAMS PER MILE - HC	CO	CO2	NOXC	MPG FUEL ECONOMY
2084	72	CHEV	CAPR	400	COLD TRANS	36.53	47.72	733.1	6.53	9.60
					COLD STAB	1.85	24.32	536.7	6.39	15.28
					HOT TRANS	2.52	27.55	576.3	5.54	14.14
					72 WEIGHTING	11.62	30.92	592.0	6.43	13.10
					75 WEIGHTING	6.16	27.68	566.8	6.27	14.09
2085	72	DODG	CORO	318	COLD TRANS	3.84	32.01	548.8	3.46	14.52
					COLD STAB	1.87	6.80	425.8	2.70	20.06
					HOT TRANS	2.79	14.20	445.0	3.02	18.64
					72 WEIGHTING	2.43	13.90	460.5	2.91	18.11
					75 WEIGHTING	2.25	11.04	443.8	2.84	18.95
2086	72	FORD	PINT	122	COLD TRANS	4.13	55.31	309.0	5.08	21.70
					COLD STAB	2.26	18.04	278.4	5.22	28.27
					HOT TRANS	3.01	33.70	292.6	5.59	25.00
					72 WEIGHTING	2.79	28.54	287.0	5.18	26.05
					75 WEIGHTING	2.61	25.07	284.4	5.27	26.72
2087	72	FORD	TORO	351	COLD TRANS	3.93	50.28	667.1	4.91	11.70
					COLD STAB	2.21	13.45	518.8	6.01	16.22
					HOT TRANS	3.70	17.50	572.4	5.32	14.51
					72 WEIGHTING	2.69	23.83	560.6	5.70	14.63
					75 WEIGHTING	2.65	18.56	545.3	5.76	15.22
2088	72	FORD	MAVE	200	COLD TRANS	3.12	16.67	451.2	5.54	18.21
					COLD STAB	1.25	4.85	352.4	5.46	24.38
					HOT TRANS	2.22	9.48	367.6	5.43	22.78
					72 WEIGHTING	1.77	8.18	380.2	5.48	22.26
					75 WEIGHTING	1.63	7.02	366.8	5.46	23.17
2089	72	FORD	LTD	351	COLD TRANS	3.30	35.39	688.9	8.51	11.75
					COLD STAB	1.88	9.46	521.6	8.41	16.36
					HOT TRANS	3.03	17.28	581.6	8.77	14.35
					72 WEIGHTING	2.28	16.77	568.8	8.44	14.73
					75 WEIGHTING	2.23	13.86	551.5	8.48	15.29
2090	72	FORD	STAW	400	COLD TRANS	5.26	94.94	700.5	7.22	10.24
					COLD STAB	2.06	18.39	614.5	8.73	13.65
					HOT TRANS	3.43	25.80	642.2	8.47	12.79
					72 WEIGHTING	2.96	39.96	638.7	8.30	12.48
					75 WEIGHTING	2.66	28.86	629.4	8.50	12.99
2091	72	MERC	MARQ	429	COLD TRANS	6.25	114.41	636.7	5.16	10.61
					COLD STAB	3.49	55.07	514.9	5.34	14.49
					HOT TRANS	7.45	121.19	524.4	4.95	12.01
					72 WEIGHTING	4.27	71.79	549.2	5.29	13.13
					75 WEIGHTING	4.46	72.88	531.2	5.26	13.45

APPENDIX H

LISTING OF HIGH SPEED CYCLE EMISSION AND FUEL

ECONOMY RESULTS ON INDIVIDUAL VEHICLES
WASHINGTON, D.C.

VEHICLE NUMBER	YEAR	MAKE	MODEL	CID	TEST TYPE	- GRAMS PER MILE - HC	CO	CO2	NOXC	MPG FUEL ECONOMY
2092	72	OLDS	DELT	350	COLD TRANS	6.96	109.52	668.2	5.71	10.29
					COLD STAB	2.84	31.41	526.4	7.21	15.17
					HOT TRANS	4.89	51.49	570.0	6.40	13.31
					72 WEIGHTING	4.00	53.42	566.4	6.79	13.38
					75 WEIGHTING	3.67	44.10	550.6	6.90	14.05
2093	72	PLYM	DUST	225	COLD TRANS	5.00	96.60	513.3	6.21	13.03
					COLD STAB	1.63	28.05	368.5	7.92	21.24
					HOT TRANS	2.54	33.48	393.7	5.95	19.53
					72 WEIGHTING	2.58	47.37	409.3	7.43	18.04
					75 WEIGHTING	2.18	37.23	390.1	7.39	19.48
2094	72	PLYM	SUBU	360	COLD TRANS	5.68	104.22	610.8	7.85	11.19
					COLD STAB	2.22	31.68	541.7	8.18	14.82
					HOT TRANS	3.22	57.83	533.8	7.66	13.98
					72 WEIGHTING	3.20	52.12	561.2	8.09	13.58
					75 WEIGHTING	2.80	44.67	548.8	8.05	14.13
2095	72	PONT	CATA	400	COLD TRANS	35.27	71.61	706.7	4.87	9.53
					COLD STAB	13.96	19.24	280.0	1.46	25.03
					HOT TRANS	27.55	26.48	595.3	5.18	12.25
					72 WEIGHTING	19.96	34.00	400.3	2.42	17.16
					75 WEIGHTING	18.72	26.75	382.4	2.47	18.34
2096	72	PONT	LEMA	350	COLD TRANS	5.28	65.92	570.7	4.59	12.84
					COLD STAB	2.31	24.21	470.6	5.23	17.20
					HOT TRANS	4.20	55.81	481.3	4.85	15.24
					72 WEIGHTING	3.15	35.97	498.8	5.05	15.70
					75 WEIGHTING	2.97	34.34	484.4	5.09	16.20
2097	72	DATS	510	097	COLD TRANS	3.44	15.10	332.2	5.15	24.19
					COLD STAB	1.63	4.30	256.3	5.93	33.09
					HOT TRANS	2.92	8.33	266.9	4.83	30.69
					72 WEIGHTING	2.14	7.34	277.7	5.71	29.98
					75 WEIGHTING	2.05	6.25	267.2	5.66	31.30
2098	72	TOYO	CORL	097	COLD TRANS	3.31	21.46	30.8	4.07	118.42
					COLD STAB	2.09	13.22	220.5	3.58	35.81
					HOT TRANS	2.57	14.66	242.4	3.20	32.44
					72 WEIGHTING	2.43	15.54	167.0	3.72	44.58
					75 WEIGHTING	2.31	14.45	201.0	3.58	38.42
2099	72	VOLK	SUPE	097	COLD TRANS	2.71	37.69	336.0	4.75	21.98
					COLD STAB	1.31	17.56	266.6	4.34	29.75
					HOT TRANS	2.11	34.23	296.5	3.71	24.86
					72 WEIGHTING	1.71	23.23	286.2	4.46	27.05
					75 WEIGHTING	1.61	22.67	279.8	4.29	27.69

APPENDIX H

LISTING OF HIGH SPEED CYCLE EMISSION AND FUEL

ECONOMY RESULTS ON INDIVIDUAL VEHICLES
WASHINGTON, D.C.

VEHICLE NUMBER	YEAR	MAKE	MODEL	CID	TEST TYPE	- G R A M S P E R M I L E - HC	CO	CO2	NOXC	MPG FUEL ECONOMY
2100	72	VOLK	SUPE	097	COLD TRANS	3.18	38.68	315.8	3.92	22.95
					COLD STAB	1.54	20.11	236.3	3.12	32.54
					HOT TRANS	1.04	39.60	261.4	2.36	27.15
					72 WEIGHTING	2.00	25.34	258.7	3.34	29.11
					75 WEIGHTING	1.66	25.49	250.0	3.09	30.05
5011	75	AMC	HORN	258	COLD TRANS	2.28	33.91	514.8	3.68	15.42
					COLD STAB	.87	5.60	435.5	2.93	19.85
					HOT TRANS	2.22	8.10	446.4	3.47	19.04
					72 WEIGHTING	1.27	13.58	457.9	3.14	18.36
					75 WEIGHTING	1.26	9.43	446.9	3.11	19.05
5012	75	BUIC	SKYL	231	COLD TRANS	2.40	27.72	504.4	7.39	15.97
					COLD STAB	.37	3.52	400.1	7.31	21.81
					HOT TRANS	.59	5.00	453.5	7.19	19.16
					72 WEIGHTING	.94	10.34	429.5	7.33	19.78
					75 WEIGHTING	.65	6.69	421.3	7.30	20.45
5013	75	BUIC	ELEC	455	COLD TRANS	2.04	23.71	781.4	3.96	10.75
					COLD STAB	.10	1.73	572.8	2.80	15.41
					HOT TRANS	1.44	14.71	629.7	2.52	13.50
					72 WEIGHTING	.65	7.92	631.6	3.12	13.73
					75 WEIGHTING	.55	6.47	607.2	2.89	14.33
5014	75	BUIC	ELEC	455	COLD TRANS	1.91	24.03	746.0	4.53	11.23
					COLD STAB	.10	2.79	541.9	2.75	16.23
					HOT TRANS	1.23	17.86	603.0	2.70	13.97
					72 WEIGHTING	.67	8.78	599.4	3.25	14.42
					75 WEIGHTING	.56	7.78	576.4	2.96	15.03
5015	75	CADI	DEVI	500	COLD TRANS	2.90	27.88	819.0	2.14	10.17
					COLD STAB	1.30	23.68	621.2	1.72	13.39
					HOT TRANS	1.19	32.89	652.5	1.92	12.53
					72 WEIGHTING	1.75	24.87	676.9	1.84	12.30
					75 WEIGHTING	1.47	25.67	650.2	1.80	12.76
5016	75	CHEV	VEGA	140	COLD TRANS	2.77	40.66	436.1	1.67	17.44
					COLD STAB	.22	4.70	389.5	1.50	22.32
					HOT TRANS	1.76	20.95	362.9	1.29	22.11
					72 WEIGHTING	.94	14.83	402.6	1.55	20.69
					75 WEIGHTING	.77	11.67	390.9	1.49	21.56
5017	75	CHEV	CAMA	250	COLD TRANS	1.96	21.15	510.6	2.37	16.13
					COLD STAB	.06	.96	403.0	1.37	21.93
					HOT TRANS	.50	1.64	422.5	1.69	20.80
					72 WEIGHTING	.60	6.65	433.3	1.65	19.91
					75 WEIGHTING	.36	3.52	419.2	1.54	20.84

APPENDIX H

LISTING OF HIGH SPEED CYCLE EMISSION AND FUEL ECONOMY RESULTS ON INDIVIDUAL VEHICLES WASHINGTON, D.C.

VEHICLE NUMBER	YEAR	MAKE	MODEL	CID	TEST TYPE	- GRAMS PER MILE - HC	CO	CO2	NOXC	MPG FUEL ECONOMY
5018	75	CHEV	MONT	350	COLD TRANS	1.79	34.22	757.3	4.63	10.86
					COLD STAB	.24	7.63	508.5	4.78	17.02
					HOT TRANS	.39	12.92	533.8	3.52	15.98
					72 WEIGHTING	.68	15.12	578.6	4.74	14.68
					75 WEIGHTING	.45	11.70	542.7	4.56	15.78
5019	75	CHEV	IMPA	350	COLD TRANS	.95	10.19	661.5	2.53	13.04
					COLD STAB	.05	2.38	517.6	1.72	17.02
					HOT TRANS	.42	10.81	534.6	1.17	16.05
					72 WEIGHTING	.30	4.58	558.2	1.95	15.67
					75 WEIGHTING	.22	4.68	537.8	1.73	16.26
5020	75	CHEV	IMPA	350	COLD TRANS	1.43	16.55	681.5	3.47	12.46
					COLD STAB	.42	.67	559.8	3.21	15.78
					HOT TRANS	.14	.74	575.8	3.17	15.37
					72 WEIGHTING	.70	5.14	594.1	3.28	14.68
					75 WEIGHTING	.50	2.60	577.1	3.24	15.23
5021	75	CHEV	CAPR	400	COLD TRANS	2.52	33.35	818.2	4.79	10.10
					COLD STAB	.05	.67	624.0	5.92	14.19
					HOT TRANS	.32	1.43	668.2	6.25	13.21
					72 WEIGHTING	.74	9.39	678.7	5.60	12.75
					75 WEIGHTING	.39	4.27	654.6	5.84	13.39
5022	75	CHRY	NEWY	440	COLD TRANS	2.49	69.95	851.2	2.69	9.15
					COLD STAB	.01	1.82	655.2	3.05	13.48
					HOT TRANS	.69	3.91	755.9	2.76	11.61
					72 WEIGHTING	.71	21.02	710.4	2.95	11.90
					75 WEIGHTING	.42	10.41	695.1	2.96	12.45
5023	75	DODG	CHAR	360	COLD TRANS	2.14	31.06	662.6	3.65	12.35
					COLD STAB	.20	.39	522.0	4.34	16.96
					HOT TRANS	.80	2.72	582.8	3.35	15.05
					72 WEIGHTING	.75	9.03	561.6	4.14	15.35
					75 WEIGHTING	.53	4.48	548.8	4.09	15.92
5024	75	DODG	DART	225	COLD TRANS	3.52	71.68	397.5	7.35	17.02
					COLD STAB	1.13	26.40	361.1	7.27	21.85
					HOT TRANS	2.42	55.58	394.6	6.65	18.12
					72 WEIGHTING	1.80	39.16	371.4	7.29	20.23
					75 WEIGHTING	1.62	36.58	370.9	7.18	20.47
5025	75	FORD	MUST	140	COLD TRANS	1.05	23.40	507.4	2.74	16.21
					COLD STAB	.29	4.36	405.6	2.08	21.47
					HOT TRANS	.49	6.86	415.8	2.05	20.73
					72 WEIGHTING	.50	9.73	434.3	2.27	19.67
					75 WEIGHTING	.41	7.07	419.6	2.16	20.54

APPENDIX H

LISTING OF HIGH SPEED CYCLE EMISSION AND FUEL

ECONOMY RESULTS ON INDIVIDUAL VEHICLES
WASHINGTON, D.C.

VEHICLE NUMBER	YEAR	MAKE	MODEL	CID	TEST TYPE	- GRAMS PER MILE - HC	CO	CO2	NOXC	MPG FUEL ECONOMY
5026	75	FORD	TORI	351	COLD TRANS	1.60	24.06	768.1	3.53	10.94
					COLD STAB	.35	1.86	602.4	2.94	14.63
					HOT TRANS	.82	5.19	660.1	2.63	13.23
					72 WEIGHTING	.70	8.12	649.1	3.11	13.36
					75 WEIGHTING	.58	5.09	631.7	2.96	13.83
5027	75	FORD	MAVE	250	COLD TRANS	1.25	25.90	609.1	2.30	13.57
					COLD STAB	.34	6.87	467.9	1.93	18.50
					HOT TRANS	1.54	11.98	466.5	1.70	18.10
					72 WEIGHTING	.60	12.23	507.7	2.03	16.78
					75 WEIGHTING	.64	10.00	484.8	1.94	17.66
5028	75	FORD	TORI	351	COLD TRANS	2.11	26.91	797.1	3.71	10.49
					COLD STAB	.46	4.78	617.5	3.14	14.16
					HOT TRANS	1.25	8.91	641.2	6.95	13.46
					72 WEIGHTING	.93	11.01	668.1	3.30	12.89
					75 WEIGHTING	.79	8.12	643.0	3.82	13.48
5029	75	FORD	LTD	400	COLD TRANS	1.95	23.71	898.5	2.88	9.42
					COLD STAB	.30	5.83	685.8	2.53	12.75
					HOT TRANS	.98	9.38	746.9	2.78	11.60
					72 WEIGHTING	.77	10.87	745.7	2.63	11.59
					75 WEIGHTING	.61	8.57	721.4	2.61	12.04
5030	75	MERC	MARQ	460	COLD TRANS	3.81	75.58	818.9	3.70	9.34
					COLD STAB	.53	18.11	636.6	3.67	13.31
					HOT TRANS	3.38	42.92	667.1	3.63	11.91
					72 WEIGHTING	1.46	34.30	688.0	3.68	11.88
					75 WEIGHTING	1.39	29.06	663.6	3.67	12.43
5031	75	MERC	COUG	351	COLD TRANS	1.42	14.79	784.9	4.53	10.92
					COLD STAB	.92	3.95	625.7	3.87	13.98
					HOT TRANS	3.98	12.75	671.3	3.62	12.60
					72 WEIGHTING	1.06	7.00	670.6	4.06	12.95
					75 WEIGHTING	1.47	6.67	652.3	3.91	13.29
5032	75	OLDS	DELT	350	COLD TRANS	3.58	49.46	673.2	1.17	11.64
					COLD STAB	.22	19.07	547.0	1.17	15.36
					HOT TRANS	.50	24.93	546.4	.90	15.11
					72 WEIGHTING	1.17	27.63	582.5	1.17	14.09
					75 WEIGHTING	.67	23.69	562.2	1.13	14.75
5033	75	OLDS	CUTL	350	COLD TRANS	3.05	25.16	589.1	1.91	13.90
					COLD STAB	.07	.46	465.8	1.73	19.01
					HOT TRANS	.63	8.11	497.7	1.35	17.32
					72 WEIGHTING	.91	7.42	500.6	1.78	17.23
					75 WEIGHTING	.52	4.68	485.9	1.69	17.93

APPENDIX H

LISTING OF HIGH SPEED CYCLE EMISSION AND FUEL

ECONOMY RESULTS ON INDIVIDUAL VEHICLES
WASHINGTON, D.C.

VEHICLE NUMBER	YEAR	MAKE	MODEL	CID	TEST TYPE	- GRAMS PER MILE - HC	CO	CO2	NOXC	MPG FUEL ECONOMY
5034	75	OLDS	CUST	455	COLD TRANS	2.44	27.94	755.9	3.71	10.99
					COLD STAB	.14	10.96	296.6	1.45	28.24
					HOT TRANS	.63	5.50	632.4	3.79	13.80
					72 WEIGHTING	.79	15.75	426.1	2.09	19.57
					75 WEIGHTING	.39	12.14	406.2	2.10	20.81
5035	75	PLYM	FURY	318	COLD TRANS	1.53	24.80	665.4	3.67	12.51
					COLD STAB	.09	.28	519.7	4.33	17.05
					HOT TRANS	.19	.82	605.7	3.55	14.60
					72 WEIGHTING	.49	7.19	560.7	4.14	15.47
					75 WEIGHTING	.28	3.34	551.1	4.12	15.92
5036	75	PLYM	VALI	225	COLD TRANS	6.39	51.44	475.7	4.35	15.38
					COLD STAB	.29	5.73	343.2	5.78	25.13
					HOT TRANS	.68	7.48	380.3	4.88	22.51
					72 WEIGHTING	2.01	18.61	380.5	5.38	21.33
					75 WEIGHTING	1.09	11.55	365.2	5.46	22.94
5037	75	PONT	GRAN	400	COLD TRANS	3.14	19.59	704.2	2.65	11.91
					COLD STAB	.51	1.90	552.8	3.10	15.92
					HOT TRANS	1.03	2.34	599.0	3.26	14.64
					72 WEIGHTING	1.25	6.88	595.5	2.97	14.54
					75 WEIGHTING	.91	4.11	578.6	3.07	15.09
5038	75	PONT	LEMA	350	COLD TRANS	2.48	23.08	590.3	2.09	13.99
					COLD STAB	.14	.89	452.8	2.40	19.52
					HOT TRANS	2.26	17.06	489.1	2.16	16.97
					72 WEIGHTING	.80	7.15	491.6	2.31	17.56
					75 WEIGHTING	.76	6.18	475.3	2.32	18.21
5039	75	PONT	GRAN	400	COLD TRANS	2.24	35.69	687.5	3.73	11.82
					COLD STAB	.30	4.41	524.8	3.82	16.66
					HOT TRANS	1.08	25.09	576.2	3.90	14.33
					72 WEIGHTING	.84	13.23	570.7	3.79	14.93
					75 WEIGHTING	.66	11.52	552.8	3.82	15.49
5040	76	MERC	CAPR	140	COLD TRANS	1.04	20.81	471.4	2.33	17.49
					COLD STAB	.31	3.12	340.6	1.95	24.22
					HOT TRANS	.42	4.97	387.9	1.92	22.35
					72 WEIGHTING	.51	8.10	391.9	2.06	21.85
					75 WEIGHTING	.41	5.56	378.4	1.99	22.85
5041	75	DATS	B210	085	COLD TRANS	1.41	11.19	332.0	5.22	25.06
					COLD STAB	1.04	4.02	256.0	5.51	33.42
					HOT TRANS	1.16	3.96	279.2	4.60	30.70
					72 WEIGHTING	1.15	6.04	277.4	5.43	30.55
					75 WEIGHTING	1.11	4.88	268.9	5.33	31.69

APPENDIX H

LISTING OF HIGH SPEED CYCLE EMISSION AND FUEL

ECONOMY RESULTS ON INDIVIDUAL VEHICLES
WASHINGTON, D.C.

VEHICLE NUMBER	YEAR	MAKE	MODEL	CID	TEST TYPE	- GRAMS PER MILE - HC	CO	CO2	NOXC	MPG FUEL ECONOMY
5042	75	HOND	CIVI	091	COLD TRANS	2.50	9.54	319.0	2.02	25.96
					COLD STAB	.17	3.19	256.3	2.55	33.90
					HOT TRANS	1.10	11.30	286.8	2.15	28.81
					72 WEIGHTING	.82	4.98	274.0	2.40	31.20
					75 WEIGHTING	.60	5.26	268.8	2.42	31.82
5043	75	TOYO	CORO	097	COLD TRANS	1.93	14.56	335.5	4.38	24.35
					COLD STAB	.91	5.72	258.9	4.13	32.78
					HOT TRANS	1.47	7.44	281.9	3.24	29.76
					72 WEIGHTING	1.20	8.21	280.5	4.20	29.86
					75 WEIGHTING	1.13	7.07	271.9	4.02	30.97
5044	75	VOLK	DASH	090	COLD TRANS	3.00	37.18	404.6	.93	18.78
					COLD STAB	.11	.38	300.8	1.03	29.41
					HOT TRANS	.25	.43	349.3	.88	25.30
					72 WEIGHTING	.92	10.75	330.1	1.00	25.36
					75 WEIGHTING	.48	4.85	321.2	.99	26.87
5045	75	VOLK	RABB	090	COLD TRANS	6.70	71.94	328.3	3.72	19.18
					COLD STAB	1.62	24.30	277.1	4.10	27.70
					HOT TRANS	4.71	29.12	288.9	3.41	25.39
					72 WEIGHTING	3.05	37.72	291.6	3.99	24.61
					75 WEIGHTING	2.73	30.84	285.2	3.94	25.93

APPENDIX I

TEST FUEL ANALYSIS REPORTS

J. A. NERE CO., INC.

HEATING OILS
GASOLINES
DIESEL FUELS
INDUSTRIAL LUBRICANTS
TEXACO PRODUCTS

TELEPHONE 373-1543

P. O. BOX 822
FREDERICKSBURG, VA. 22401

June 25, 1975

Mr. Martin
c/o General Environments Corp.
6840 Industrial Road
Springfield, Va. 22151

Dear Mr. Martin:

Below is an analysis of our Texaco Unleaded Gasoline.

Sulfur, %	0.10
Gum, ASTM, mg/100 ml	4
Octane No. Research	91
Reid Vapor Press.	
psi @ 100	8.5 max.
ASTM Distillation, °F	
10%	122
50%	170-230
90%	356
Residue, %	2%
End Point	410
Lead Content	0.03 at Terminal
	0.05 at Service Station
Water %, Sediment %	0
Olefin, %	0.8
Saturates, %	64.6
Aromatics, %	34.6
Phosphorus	0.002

Very truly yours,

J. A. NERE CO., INC.

John Nere

John A. Nere
President

JAN:ds

PAR
PETROLEUM ANALYTICAL RESEARCH CORP
PETROLEUM ANALYTICAL RESEARCH CORPORATION
P. O. Box 12587
Houston, Texas 77017
1503 Central
Phone 928.5961

173<

DATE: 4/30/75 PAR NUMBER 19165 APPROVED: [signature]

SAMPLE: Indolene Fuel, 2 bottles received 4/24/75

P. O. #4191

COMPANY: General Environments Corp. 6840 Industrial Rd. Springfield, Va 22151

DISTILLATION ASTM D-86

%	°F	M.V.	mm Hg.	°F	760 mm
IBP	95°				
5	132°				
10	144°				
20	164°				
30	192°				
40	208°				
50	220°				
60	236°				
70	250°				
80	271°				
90	324°				
95	346°				
E. P.	364°				
Rec.	97%				
Res.	2%				
Loss	1%				

R.V.P.	8.8	B.S.W.	FIA - Saturates - 68.7%
COLOR		DOCTOR	Olefins - 0.0%
CORROSION		SULFUR WT. %	Aromatics - 31.3%
POUR		VISCOSITY @	
C.R. (10 % Btms)		ASH	
RAMSBOTTOM		ANILINE NO. °F	
FREEZE		CHLORIDE PPM	
GRAVITY API		LEAD (Organic) gm/ U.S. gal - 3.1	
SALT #/1000 BBL.		OCTANE RES. O	103.6
SULPHUR PPM - 31		OCTANE RES 3 cc.	
		PHOSPHORUS - ASTM - D-3231 - <0.005 g/gal.	